PROJECT: 17BP.12.R.62

CONTRACT: DL00242

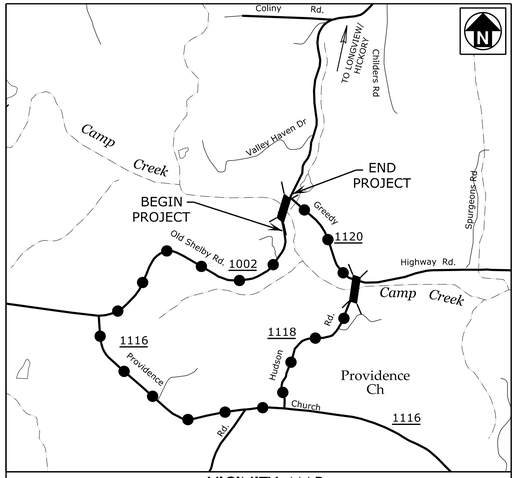

VICINITY MAP
(NOT TO SCALE)
OFF-SITE DETOUR

STATE OF NORTH CAROLINA
DIVISION OF HIGHWAYS

CATAWBA COUNTY

STATE	STATE PROJECT REFERENCE NO.	SHEET NO.	TOTAL SHEETS
N.C.	17BP.12.R.62	1	

STATE PROJECT NO.	F.A. PROJ. NO.	DESCRIPTION
17BP.12.PE.62	N/A	P.E.
17BP.12.ROW.62	N/A	R/W & UTIL
17BP.12.R.62	N/A	CONST

LOCATION: BRIDGE NO. 57 OVER CAMP CREEK ON SR 1002 (OLD SHELBY ROAD)

TYPE OF WORK: GRADING, PAVING, DRAINAGE AND STRUCTURE

4

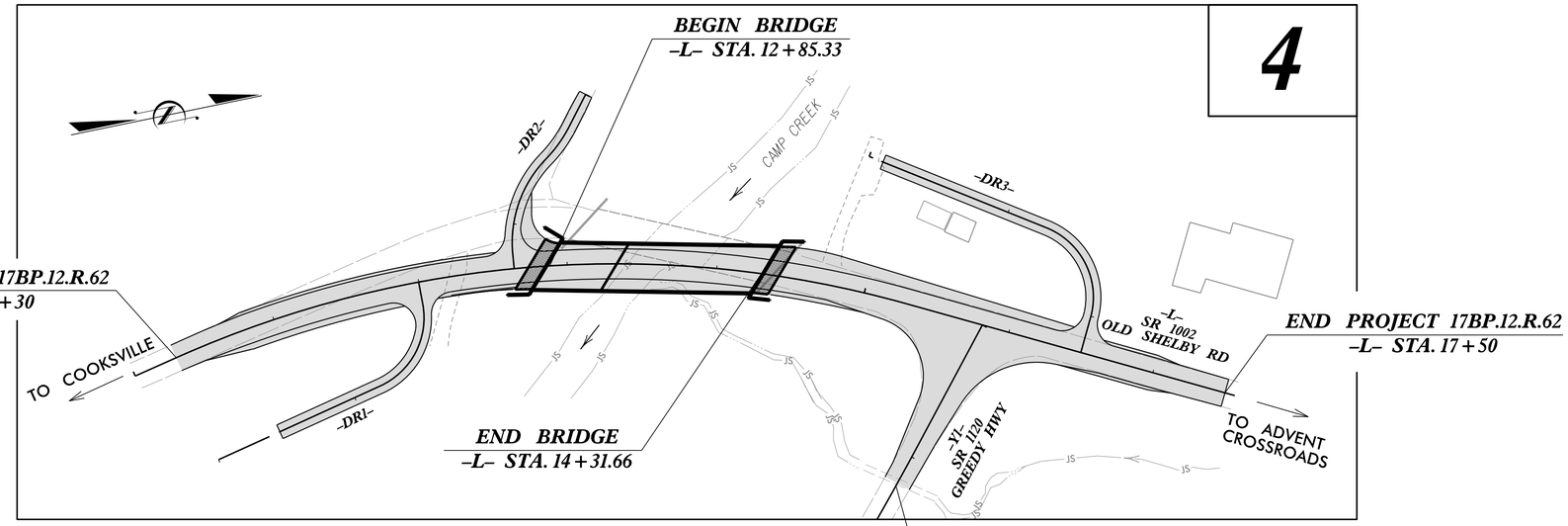

PLANS PREPARED BY:

Mattern & Craig
ENGINEERS & SURVEYORS
12 BROAD STREET
ASHEVILLE, NORTH CAROLINA 28801
(828) 254-2201
FAX (828) 254-4562
NC LIC. NO. C-1154

DOCUMENT NOT CONSIDERED FINAL UNLESS ALL SIGNATURES COMPLETED

GRAPHIC SCALES

30 15 0 30 60
PLANS

30 15 0 30 60
PROFILE (HORIZONTAL)

6 3 0 6 12
PROFILE (VERTICAL)

DESIGN DATA

ADT 2013 = 1300

T = 6 %
V = 45 MPH

FUNC CLASS =
RURAL MINOR COLLECTOR
SUBREGIONAL TIER

PROJECT LENGTH

LENGTH ROADWAY PROJECT 17BP.12.R.62 = 0.108 MILES

LENGTH STRUCTURE PROJECT 17BP.12.R.62 = 0.028 MILES

TOTAL LENGTH PROJECT 17BP.12.R.62 = 0.136 MILES

Prepared In the Office of:
MATTERN & CRAIG
12 BROAD ST.
ASHEVILLE, NC 28801
FOR NCDOT DIVISION OF HIGHWAYS

2018 STANDARD SPECIFICATIONS

RIGHT OF WAY DATE:
DECEMBER 14, 2020

LETTING DATE:
APRIL 12, 2022

AARON CARVER, PE
PROJECT ENGINEER

SARAH GREENE, EI
PROJECT DESIGN ENGINEER

NCDOT CONTACT:
STEVE RACKLEY, PE
DIVISION 12 BRIDGE MANAGER

ROADWAY DESIGN ENGINEER

DocuSigned by: Aaron Carver 8250B42A220F49C...
SIGNATURE:
NORTH CAROLINA PROFESSIONAL SEAL 030453 ENGINEER AARON C. CARVER P.E.
2/22/2022

HYDRAULICS ENGINEER

DocuSigned by: Aaron Carver 8250B42A220F49C...
SIGNATURE:
NORTH CAROLINA PROFESSIONAL SEAL 030453 ENGINEER AARON C. CARVER P.E.
2/22/2022

STATE OF NORTH CAROLINA DEPARTMENT OF TRANSPORTATION

2/8/2022
4:02:47 PM
I:\3790B Catawba 57\06 17BP12R62\Roadway\Proj\17BP12R62_rdy_tsh.dgn
accarver

PROJECT REFERENCE NO.	SHEET NO.
17BPJ2.R.62	1-A

ROADWAY DESIGN ENGINEER

NORTH CAROLINA PROFESSIONAL SEAL 030453 ENGINEER DAVID C. CARVER

2/22/2022

DOCUMENT NOT CONSIDERED FINAL UNLESS ALL SIGNATURES COMPLETED

INDEX OF SHEETS

SHEET NUMBER	SHEET
1	TITLE SHEET
1-A	INDEX OF SHEETS, GENERAL NOTES, AND LIST OF STANDARD DRAWINGS
1-B	CONVENTIONAL SYMBOLS
RW01 THRU RW04	SURVEY CONTROL, EXISTING CENTERLINES, RIGHT OF WAY, EASEMENTS, & PROPERTY TIES
2A-1 THROUGH 2A-2	PAVEMENT SCHEDULE, TYPICAL SECTIONS, AND WEDGING DETAILS
2C-1	GUARDRAIL INSTALLATION IN LIEU OF STD 862.02 SHEET 6 OF 8
2C-2	STRUCTURAL ANCHOR UNITS IN LIEU OF STD 862.03 SHEET 1 OF 7
2C-3	TYPE III - SHOP CURVED ANCHOR UNIT
2C-4	GUARDRAIL INSTALLATION: A.T.-1 SYSTEM
3B-1	SUMMARY OF DRAINAGE QUANTITIES, SUMMARY OF GUARDRAIL, SUMMARY OF PAVEMENT REMOVAL, AND SUMMARY OF EARTHWORK
4	PLAN AND PROFILE SHEET
5	PROFILES
TMP-1 THRU TMP-2	TRAFFIC MANAGEMENT PLANS
PM-1	PAVEMENT MARKING PLAN
SD-1	SPECIAL SIGN DESIGN
EC-1 THRU EC-5	EROSION CONTROL PLANS
RE-1 THRU RE-5	STREAM RELOCATION PLANS
RF-1 THRU RF-2	REFORESTATION PLANS
UO-1	UTILITIES BY OTHERS PLANS
X-0	CROSS-SECTION SUMMARY
X-1 THRU X-10	CROSS-SECTIONS
S-1 THRU S-26	STRUCTURE PLANS

GENERAL NOTES:

2018 SPECIFICATIONS
EFFECTIVE: 01-17-18

GRADE LINE:
GRADING AND SURFACING OR RESURFACING AND WIDENING:

THE GRADE LINES SHOWN DENOTE THE FINISHED ELEVATION OF THE PROPOSED SURFACING AT GRADE POINTS SHOWN ON THE TYPICAL SECTIONS. WHERE NO GRADE LINES ARE SHOWN, THE PROFILES SHOWN DENOTE THE TOP ELEVATION OF THE EXISTING PAVEMENT ALONG THE CENTER LINE OF SURVEY ON WHICH THE PROPOSED RESURFACING WILL BE PLACED. GRADE LINES MAY BE ADJUSTED BY THE ENGINEER IN ORDER TO SECURE A PROPER TIE-IN.

CLEARING:

CLEARING ON THIS PROJECT SHALL BE PERFORMED TO THE LIMITS ESTABLISHED BY METHOD II.

SUPERELEVATION:

ALL CURVES ON THIS PROJECT SHALL BE SUPERELEVATED IN ACCORDANCE WITH STD. NO. 225.04 USING THE RATE OF SUPERELEVATION AND RUNOFF SHOWN ON THE PLANS. SUPERELEVATION IS TO BE REVOLVED ABOUT THE GRADE POINTS SHOWN ON THE TYPICAL SECTIONS.

SHOULDER CONSTRUCTION:

ASPHALT, EARTH, AND CONCRETE SHOULDER CONSTRUCTION ON THE HIGH SIDE OF SUPERELEVATED CURVES SHALL BE IN ACCORDANCE WITH STD. NO. 560.01.

SIDE ROADS:

THE CONTRACTOR WILL BE REQUIRED TO DO ALL NECESSARY WORK TO PROVIDE SUITABLE CONNECTIONS WITH ALL ROADS, STREETS, AND DRIVES ENTERING THIS PROJECT. THIS WORK WILL BE PAID FOR AT THE CONTRACT UNIT PRICE FOR THE PARTICULAR ITEMS INVOLVED.

GUARDRAIL:

THE GUARDRAIL LOCATIONS SHOWN ON THE PLANS MAY BE ADJUSTED DURING CONSTRUCTION AS DIRECTED BY THE ENGINEER. THE CONTRACTOR SHOULD CONSULT WITH THE ENGINEER PRIOR TO ORDERING GUARDRAIL MATERIAL.

SUBSURFACE PLANS:

NO SUBSURFACE PLANS ARE AVAILABLE ON THIS PROJECT. THE CONTRACTOR SHOULD MAKE HIS OWN INVESTIGATION AS TO THE SUBSURFACE CONDITIONS.

END BENTS:

THE ENGINEER SHALL CHECK THE STRUCTURE END BENT PLANS, DETAILS, AND CROSS-SECTION PRIOR TO SETTING OF THE SLOPE STAKES FOR THE EMBANKMENT OR EXCAVATION APPROACHING A BRIDGE.

UTILITIES:

UTILITY OWNERS ON THIS PROJECT ARE: CENTURY LINK (TELEPHONE), RUTHERFORDTON ELECTRIC MEMBERSHIP CORPORATION (POWER), AND CHARTER COMMUNICATIONS (CATV).

ANY RELOCATION OF EXISTING UTILITIES WILL BE ACCOMPLISHED BY OTHERS.

RIGHT-OF-WAY MARKERS:

ALL RIGHT-OF-WAY MARKERS ON THIS PROJECT SHALL BE PLACED BY OTHERS.

2018 ROADWAY ENGLISH STANDARD DRAWINGS

The following Roadway Standards as appear in "Roadway Standard Drawings" Highway Design Branch - N. C. Department of Transportation - Raleigh, N. C., Dated January 17, 2018 are applicable to this project and by reference hereby are considered a part of these plans:

STD.NO.	TITLE
DIVISION 2 - EARTHWORK	
200.02	Method of Clearing - Method II
225.02	Guide for Grading Subgrade - Secondary and Local
225.04	Method of Obtaining Superelevation - Two Lane Pavement
275.01	Rock Plating
DIVISION 3 - PIPE CULVERTS	
300.01	Method of Pipe Installation
310.10	Driveway Pipe Construction
DIVISION 4 - MAJOR STRUCTURES	
422.02	Bridge Approach Fills - TYPE II MODIFIED APPROACH FILL
DIVISION 5 - SUBGRADE, BASES AND SHOULDERS	
560.01	Method of Shoulder Construction - High Side of Superelevated Curve - Method I
DIVISION 8 - INCIDENTALS	
840.25	Anchorage for Frames
840.29	Frames and Narrow Slot Flat Grates
840.35	Traffic Bearing Grated Drop Inlet - for Cast Iron Double Frame and Grates
846.04	Drop Inlet Installation in Shoulder Berm Gutter
862.01	Guardrail Placement
862.02	Guardrail Installation
862.03	Structure Anchor Unit
876.02	Guide for Rip Rap at Pipe Outlets

Mattern & Craig
ENGINEERS•SURVEYORS
12 BROAD STREET
ASHEVILLE, NORTH CAROLINA 28801
(828) 254-2201
FAX (828) 254-4562
NC LIC. NO. C-1154

12/2/2016

PROJECT REFERENCE NO.	SHEET NO.
17BP.12.R.62	1B

STATE OF NORTH CAROLINA, DIVISION OF HIGHWAYS

CONVENTIONAL PLAN SHEET SYMBOLS

Note: Not to Scale

**S.U.E. = Subsurface Utility Engineering*

BOUNDARIES AND PROPERTY:

- State Line
- County Line
- Township Line
- City Line
- Reservation Line
- Property Line
- Existing Iron Pin — EIP
- Computed Property Corner
- Property Monument — ECM
- Parcel/Sequence Number — 123
- Existing Fence Line
- Proposed Woven Wire Fence
- Proposed Chain Link Fence
- Proposed Barbed Wire Fence
- Existing Wetland Boundary — WLB
- Proposed Wetland Boundary — WLB
- Existing Endangered Animal Boundary — EAB
- Existing Endangered Plant Boundary — EPB
- Existing Historic Property Boundary — HPB
- Known Contamination Area: Soil — S
- Potential Contamination Area: Soil — S
- Known Contamination Area: Water — W
- Potential Contamination Area: Water — W
- Contaminated Site: Known or Potential

BUILDINGS AND OTHER CULTURE:

- Gas Pump Vent or U/G Tank Cap
- Sign — S
- Well — W
- Small Mine
- Foundation
- Area Outline
- Cemetery
- Building
- School
- Church
- Dam

HYDROLOGY:

- Stream or Body of Water
- Hydro, Pool or Reservoir
- Jurisdictional Stream — JS
- Buffer Zone 1 — BZ 1
- Buffer Zone 2 — BZ 2
- Flow Arrow
- Disappearing Stream
- Spring
- Wetland
- Proposed Lateral, Tail, Head Ditch — FLOW
- False Sump

RAILROADS:

- Standard Gauge — CSX TRANSPORTATION
- RR Signal Milepost — MILEPOST 35
- Switch — SWITCH
- RR Abandoned
- RR Dismantled

RIGHT OF WAY & PROJECT CONTROL:

- Secondary Horiz and Vert Control Point
- Primary Horiz Control Point
- Primary Horiz and Vert Control Point
- Exist Permanent Easment Pin and Cap
- New Permanent Easement Pin and Cap
- Vertical Benchmark
- Existing Right of Way Marker
- Existing Right of Way Line
- New Right of Way Line — RW
- New Right of Way Line with Pin and Cap — RW
- New Right of Way Line with Concrete or Granite R/W Marker — RW
- New Control of Access Line with Concrete C/A Marker — CA
- Existing Control of Access — CA
- New Control of Access — CA
- Existing Easement Line — E
- New Temporary Construction Easement — E
- New Temporary Drainage Easement — TDE
- New Permanent Drainage Easement — PDE
- New Permanent Drainage / Utility Easement — DUE
- New Permanent Utility Easement — PUE
- New Temporary Utility Easement — TUE
- New Aerial Utility Easement — AUE

ROADS AND RELATED FEATURES:

- Existing Edge of Pavement
- Existing Curb
- Proposed Slope Stakes Cut — C
- Proposed Slope Stakes Fill — F
- Proposed Curb Ramp — CR
- Existing Metal Guardrail
- Proposed Guardrail
- Existing Cable Guiderail
- Proposed Cable Guiderail
- Equality Symbol
- Pavement Removal

VEGETATION:

- Single Tree
- Single Shrub
- Hedge
- Woods Line
- Orchard
- Vineyard — Vineyard

EXISTING STRUCTURES:

MAJOR:

- Bridge, Tunnel or Box Culvert — CONC
- Bridge Wing Wall, Head Wall and End Wall — CONC WW

MINOR:

- Head and End Wall — CONC HW
- Pipe Culvert
- Footbridge
- Drainage Box: Catch Basin, DI or JB — CB
- Paved Ditch Gutter
- Storm Sewer Manhole — S
- Storm Sewer — S

UTILITIES:

POWER:

- Existing Power Pole
- Proposed Power Pole
- Existing Joint Use Pole
- Proposed Joint Use Pole
- Power Manhole — P
- Power Line Tower
- Power Transformer
- U/G Power Cable Hand Hole
- H-Frame Pole
- U/G Power Line LOS B (S.U.E.*) — P
- U/G Power Line LOS C (S.U.E.*) — P
- U/G Power Line LOS D (S.U.E.*) — P

TELEPHONE:

- Existing Telephone Pole
- Proposed Telephone Pole
- Telephone Manhole — T
- Telephone Pedestal — T
- Telephone Cell Tower
- U/G Telephone Cable Hand Hole — HH
- U/G Telephone Cable LOS B (S.U.E.*) — T
- U/G Telephone Cable LOS C (S.U.E.*) — T
- U/G Telephone Cable LOS D (S.U.E.*) — T
- U/G Telephone Conduit LOS B (S.U.E.*) — TC
- U/G Telephone Conduit LOS C (S.U.E.*) — TC
- U/G Telephone Conduit LOS D (S.U.E.*) — TC
- U/G Fiber Optics Cable LOS B (S.U.E.*) — T FO
- U/G Fiber Optics Cable LOS C (S.U.E.*) — T FO
- U/G Fiber Optics Cable LOS D (S.U.E.*) — T FO

WATER:

- Water Manhole — W
- Water Meter
- Water Valve
- Water Hydrant
- U/G Water Line LOS B (S.U.E*) — W
- U/G Water Line LOS C (S.U.E*) — W
- U/G Water Line LOS D (S.U.E*) — W
- Above Ground Water Line — A/G Water

TV:

- TV Pedestal — C
- TV Tower
- U/G TV Cable Hand Hole — HH
- U/G TV Cable LOS B (S.U.E.*) — TV
- U/G TV Cable LOS C (S.U.E.*) — TV
- U/G TV Cable LOS D (S.U.E.*) — TV
- U/G Fiber Optic Cable LOS B (S.U.E.*) — TV FO
- U/G Fiber Optic Cable LOS C (S.U.E.*) — TV FO
- U/G Fiber Optic Cable LOS D (S.U.E.*) — TV FO

GAS:

- Gas Valve
- Gas Meter
- U/G Gas Line LOS B (S.U.E.*) — G
- U/G Gas Line LOS C (S.U.E.*) — G
- U/G Gas Line LOS D (S.U.E.*) — G
- Above Ground Gas Line — A/G Gas

SANITARY SEWER:

- Sanitary Sewer Manhole
- Sanitary Sewer Cleanout
- U/G Sanitary Sewer Line — SS
- Above Ground Sanitary Sewer — A/G Sanitary Sewer
- SS Forced Main Line LOS B (S.U.E.*) — FSS
- SS Forced Main Line LOS C (S.U.E.*) — FSS
- SS Forced Main Line LOS D (S.U.E.*) — FSS

MISCELLANEOUS:

- Utility Pole
- Utility Pole with Base
- Utility Located Object
- Utility Traffic Signal Box — S
- Utility Unknown U/G Line LOS B (S.U.E.*) — ?UTL
- U/G Tank; Water, Gas, Oil
- Underground Storage Tank, Approx. Loc. — UST
- A/G Tank; Water, Gas, Oil
- Geoenvironmental Boring
- U/G Test Hole LOS A (S.U.E.*)
- Abandoned According to Utility Records — AATUR
- End of Information — E.O.I.

STATE	STATE PROJECT REFERENCE NO.	SHEET NO.	TOTAL SHEETS
N.C.	17BP.12.R.62	RW01	5

STATE OF NORTH CAROLINA
DIVISION OF HIGHWAYS

SURVEY CONTROL, EXISTING CENTERLINES, RIGHT OF WAY, EASEMENTS AND PROPERTY TIES

CATAWBA COUNTY

LOCATION: BRIDGE NO. 57 OVER CAMP CREEK ON SR 1002 (OLD SHELBY ROAD)

TYPE OF WORK: GRADING, PAVING, DRAINAGE AND STRUCTURE

75% PLANS

PROJECT: 17BP.12.R.62

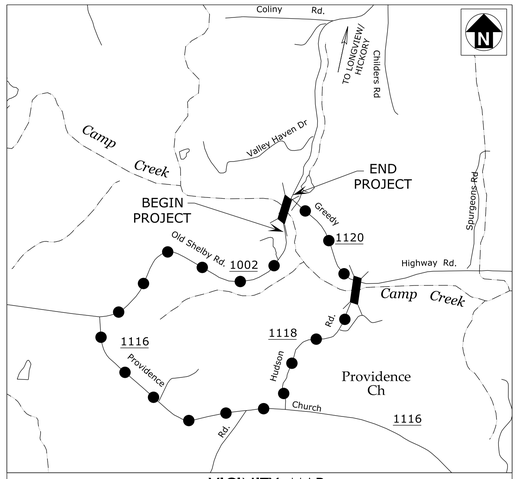

VICINITY MAP
(NOT TO SCALE)
OFF-SITE DETOUR

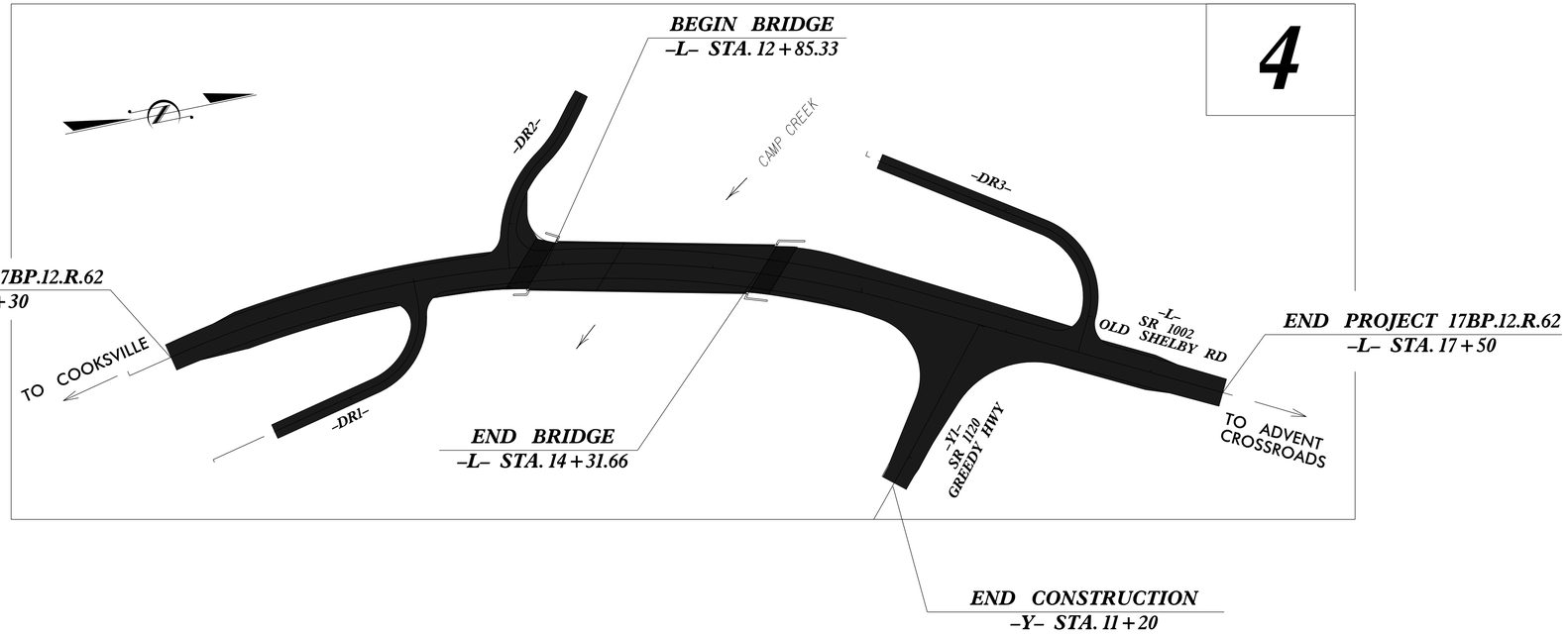

DOCUMENT NOT CONSIDERED FINAL UNLESS ALL SIGNATURES COMPLETED

GRAPHIC SCALE

50 25 0 50 100
PLANS

DATUM DESCRIPTION

THE LOCALIZED COORDINATE SYSTEM DEVELOPED FOR THIS PROJECT
IS BASED ON THE STATE PLANE COORDINATES ESTABLISHED BY
NCDOT FOR MONUMENT "BL-2"
WITH NAD 83/2011 STATE PLANE GRID COORDINATES OF
NORTHING: 696,381.724(ft) EASTING: 1,274,489.731(ft)
ELEVATION: 965.85(ft)
THE AVERAGE COMBINED GRID FACTOR USED ON THIS PROJECT
(GROUND TO GRID) IS: 0.99985375
THE N.C. LAMBERT GRID BEARING AND
LOCALIZED HORIZONTAL GROUND DISTANCE FROM
"BL-2" TO -L- STATION 10+00.00 IS
S 4°19'51.8" W 432.919(ft)
ALL LINEAR DIMENSIONS ARE LOCALIZED HORIZONTAL DISTANCES
VERTICAL DATUM USED IS NAVD 88

Prepared In the Office of:

2018 STANDARD SPECIFICATIONS

RIGHT OF WAY DATE:
MAY 15, 2018

LETTING DATE:
MAY 9, 2019

PROFESSIONAL LAND SURVEYOR

NORTH CAROLINA PROFESSIONAL SEAL L-3828 LAND SURVEYOR JAMES I. JEFFRIES

DocuSigned by:
A43045A2D7AE4CA...
3/4/2021

SIGNATURE: ***Date:***

STATE OF NORTH CAROLINA DEPARTMENT OF TRANSPORTATION

$$$$SYSTIME$$$$
$$$$USERNAME$$$$
$$$$DGN$$$$
02/11/21

SURVEY CONTROL SHEET

W/ EXISTING CENTERLINE ALIGNMENTS PRIOR TO CONSTRUCTION

PROJECT REFERENCE NO.	SHEET NO.
17BP.12.R.62	RW02C-1

Location and Surveys

PROJECT SURVEYOR

NORTH CAROLINA PROFESSIONAL SEAL L-3828 LAND SURVEYOR JAMES I. JEFFREYS

DOCUMENT NOT CONSIDERED FINAL UNLESS ALL SIGNATURES COMPLETED

I, James I. Jeffreys, PE, PLS, certify that the data compiled came from available surveys/mapping performed by others and provided to me by NCDOT and do not certify to the accuracy or quality of the individual data sources.

This day 3/4/2021.

DocuSigned by:

A43045A2D7AE4CA...

James I. Jeffreys, PE PLS
Professional Land Surveyor L-3828

DATUM DESCRIPTION

THE LOCALIZED COORDINATE SYSTEM DEVELOPED FOR THIS PROJECT IS BASED ON THE STATE PLANE COORDINATES ESTABLISHED BY NCDOT FOR MONUMENT "BL-2"
WITH NAD 83/NA 2011 STATE PLANE GRID COORDINATES OF
NORTHING: 696381.724(ft) EASTING: 1274489.731(ft)
ELEVATION: 965.85(ft)
THE AVERAGE COMBINED GRID FACTOR USED ON THIS PROJECT (GROUND TO GRID) IS: 0.99985375
THE N.C. LAMBERT GRID BEARING AND LOCALIZED HORIZONTAL GROUND DISTANCE FROM "BL-2" TO -L- STATION 10+00 IS
S 04° 19' 52" W 432.92'
ALL LINEAR DIMENSIONS ARE LOCALIZED HORIZONTAL DISTANCES
VERTICAL DATUM USED IS NAVD 88

NC GRID NAD 83 NA 2011

BL

POINT	DESC.	NORTH	EAST	ELEVATION
1	BL-1	696065.6428	1274414.9596	972.66
2	BL-2	696381.7240	1274489.7310	965.85
3	BL-3	696782.6060	1274652.1700	987.14

BM1 ELEVATION = 956.78
N 696165 E 1274530
RR SPIKE IN 16" WALNUT

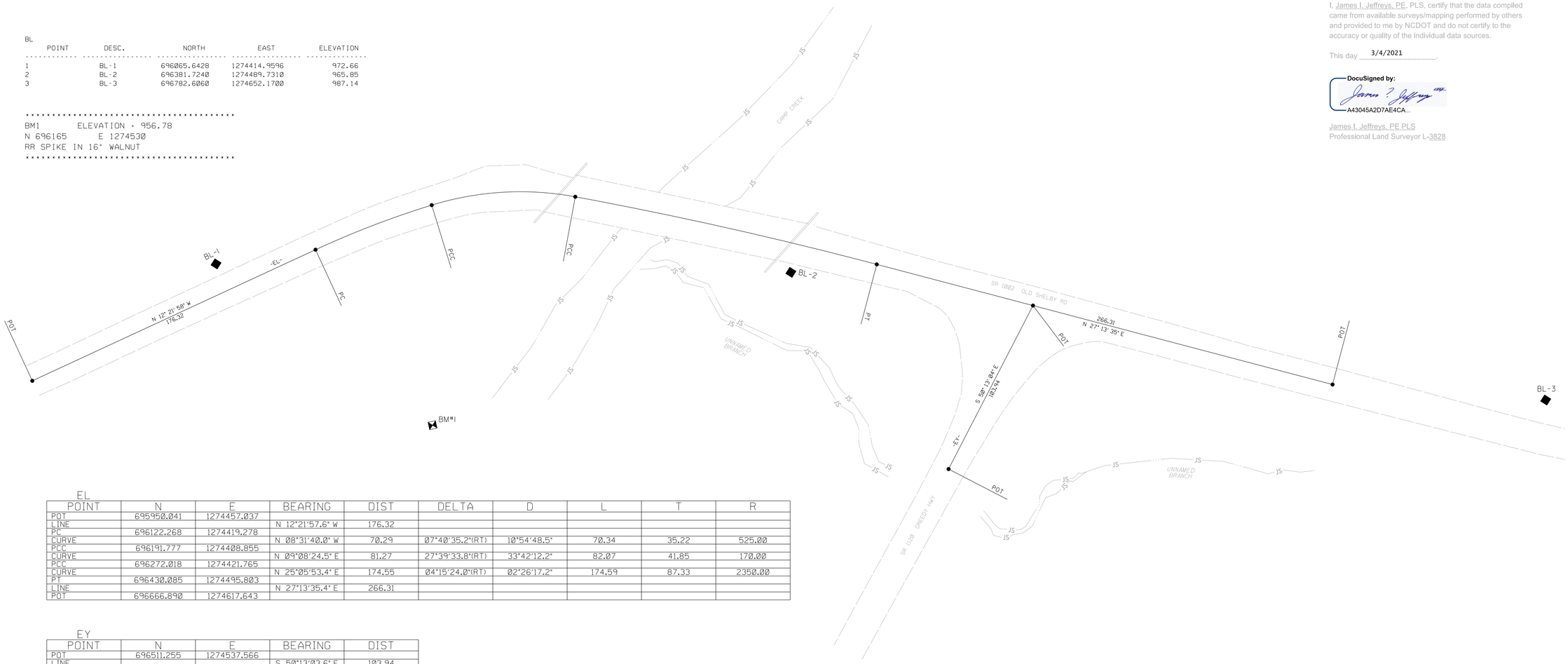

EL

POINT	N	E	BEARING	DIST	DELTA	D	L	T	R
POT	695950.041	1274457.037							
LINE			N 12°21'57.6" W	176.32					
PC	696122.268	1274419.278							
CURVE			N 08°31'40.0" W	70.29	07°40'35.2"(RT)	10°54'48.5"	70.34	35.22	525.00
PCC	696191.777	1274408.855							
CURVE			N 09°08'24.5" E	81.27	27°39'33.8"(RT)	33°42'12.2"	82.07	41.85	170.00
PCC	696272.018	1274421.765							
CURVE			N 25°05'53.4" E	174.55	04°15'24.0"(RT)	02°26'17.2"	174.59	87.33	2350.00
PT	696430.085	1274495.803							
LINE			N 27°13'35.4" E	266.31					
POT	696666.890	1274617.643							

EY

POINT	N	E	BEARING	DIST
POT	696511.255	1274537.566		
LINE			S 50°13'03.6" E	103.94
POT	696444.749	1274617.439		

NOTES:

1. PROJECT CONTROL WAS ESTABLISHED USING GNSS, THE GLOBAL NAVIGATION SATELLITE SYSTEM.

2. THE SURVEY CONTROL DATA FOR THIS PROJECT HAS BEEN COMPILED FROM VARIOUS SOURCES. IF FURTHER INFORMATION REGARDING PROJECT CONTROL IS NEEDED, PLEASE CONTACT THE LOCATION AND SURVEYS UNIT.

3/4/21

REVISIONS

04-MAR-2021 11:04
C:\Projects\Bridges\Catawba.17-0057\LS12-21-007_RW.Sheets\17BP12R62.ls_RW02C-1.dgn
jjeffreys AT LS-314619

PROPOSED ALIGNMENT CONTROL SHEET

PROJECT REFERENCE NO.	SHEET NO.
17BP.12.R.62	RW02D-1

Location and Surveys

PROJECT SURVEYOR

NORTH CAROLINA PROFESSIONAL SEAL L-3828 LAND SURVEYOR JAMES I. JEFFREYS

DOCUMENT NOT CONSIDERED FINAL UNLESS ALL SIGNATURES COMPLETED

I, James I. Jeffreys, PE, PLS, certify that the data compiled came from available surveys/mapping performed by others and provided to me by NCDOT and do not certify to the accuracy or quality of the individual data sources.

This day 3/4/2021.

DocuSigned by:
James I. Jeffreys
A43045A2D7AE4CA...

James I. Jeffreys, PE PLS
Professional Land Surveyor L-3828

L

TYPE	STATION	NORTH	EAST
POT	10+00.00	695950.0412	1274457.0373
PC	10+31.35	695980.6685	1274450.3225
PT	15+28.89	696464.2673	1274513.3906
POT	17+56.76	696666.8899	1274617.6430

Y1

TYPE	STATION	NORTH	EAST
POT	10+00.00	696511.2548	1274537.5664
PC	10+92.01	696452.3829	1274608.2710
PT	11+54.77	696411.4704	1274655.8674
POT	12+22.39	696366.5960	1274706.4455

DR1

TYPE	STATION	NORTH	EAST
POT	10+00.00	696148.1094	1274433.7401
PC	10+15.00	696147.8307	1274448.7375
PT	10+81.37	696108.9809	1274496.5512
POT	12+00.00	695993.3383	1274522.9848

DR2

TYPE	STATION	NORTH	EAST
POT	10+00.00	696282.5675	1274333.4745
PC	10+23.97	696267.5955	1274352.1941
PRC	10+50.81	696247.9784	1274370.3625
PT	11+20.00	696213.4819	1274427.8643
POT	11+30.00	696212.4049	1274437.8061

DR3

TYPE	STATION	NORTH	EAST
POT	10+00.00	696459.7972	1274412.1742
PC	11+27.62	696566.2194	1274482.6098
PT	12+00.69	696583.0838	1274547.1802
POT	12+25.00	696571.9600	1274568.8001

NOTES:

1. PROJECT CONTROL WAS ESTABLISHED USING GNSS, THE GLOBAL NAVIGATION SATELLITE SYSTEM.

2. THE PROPOSED ALIGNMENT CONTROL DATA FOR THIS PROJECT HAS BEEN COMPILED FROM VARIOUS SOURCES. IF FURTHER INFORMATINO REGARDING PROJECT CONTROL IS NEEDED, PLEASE CONTACT THE LOCATION AND SURVEYS UNIT.

REVISIONS

2/17/21

04-MAR-2021 10:53
C:\Projects\Bridges\Catawba_17-0057\LS12-21-007_RW_Sheets\17BP12R62_ls_RW02D-1.dgn
jjeffreys AT LS-314619

RIGHT OF WAY CONTROL SHEET

PROJECT REFERENCE NO.	SHEET NO.
17BP.12.R.62	RW03E-1

Location and Surveys

PROJECT SURVEYOR

NORTH CAROLINA PROFESSIONAL SEAL L-3828 LAND SURVEYOR JAMES I JEFFREYS

DOCUMENT NOT CONSIDERED FINAL UNLESS ALL SIGNATURES COMPLETED

ROW MARKER IRON PIN AND CAP

ALIGN	STATION	OFFSET	NORTH	EAST
L	10+30.00	60.00	695992.1945	1274509.2206
L	10+30.00	30.00	695985.7699	1274479.9166
L	11+70.00	40.00	696119.0421	1274473.8022
L	13+26.11	-53.93	696283.7251	1274394.1441
L	14+50.00	-75.00	696419.0989	1274411.1670
L	16+70.00	-30.00	696603.4693	1274551.2742

ROW MARKER IRON PIN AND CAP

ALIGN	STATION	OFFSET	NORTH	EAST
Y1	10+59.40	28.69	696451.1960	1274564.8596

I , James I. Jeffreys, PE, , certify that the right of way and permanent easement monumentation for this project shown herein was completed under my direct and responsible charge from an actual survey made under my supervision; that all horizontal closures had a minimum ratio of precision of 1:10,000 (Class A). Field work was performed from 2/26/2021 to 3/3/2021, and all coordinates are based on NAD83/2011; That this survey was performed to meet the requirements of 21NCAC 56.1600 as applicable.

This day 3/4/2021.

DocuSigned by:

A43045A2D7AE4CA...

James I. Jeffreys, PE, PLS
Professional Land Surveyor L-3828

NOTES:

1. IF FURTHER INFORMATION REGARDING PROJECT CONTROL IS NEEDED PLEASE CONTACT THE LOCATION AND SURVEYS UNIT.
2. PROJECT CONTROL WAS ESTABLISHED USING GNSS, THE GLOBAL NAVIGATION SATELLITE SYSTEM.
3. RIGHT OF WAY MONUMENTATION ESTABLISHED 2/26/2021 TO 3/3/2021 .

REVISIONS

3/4/21

04-MAR-2021\0:54
C:\Projects\Bridges\Catawba.17-0057\LS12-21-007_RW_Sheets\17BP12R62_ls_RW03E-1.dgn
jlJeffreys AT CS-31619

PROJECT REFERENCE NO.	SHEET NO.
17BP.12.R.62	RW-4

Location and Surveys

PROJECT SURVEYOR

NORTH CAROLINA PROFESSIONAL SEAL L-3828 LAND SURVEYOR JAMES I. JEFFREYS

DOCUMENT NOT CONSIDERED FINAL UNLESS ALL SIGNATURES COMPLETED

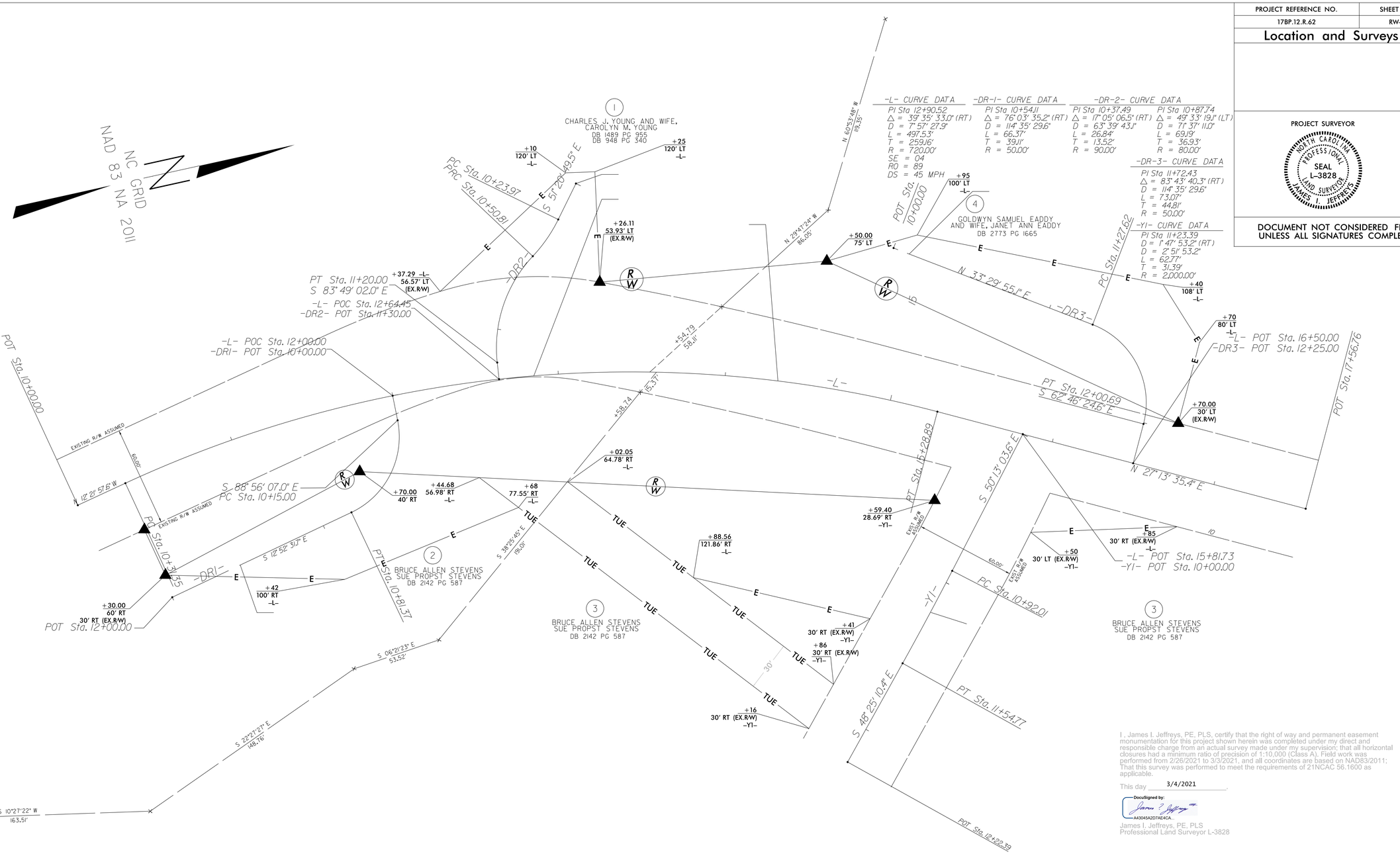

I, James I. Jeffreys, PE, PLS, certify that the right of way and permanent easement monumentation for this project shown herein was completed under my direct and responsible charge from an actual survey made under my supervision; that all horizontal closures had a minimum ratio of precision of 1:10,000 (Class A). Field work was performed from 2/26/2021 to 3/3/2021, and all coordinates are based on NAD83/2011; That this survey was performed to meet the requirements of 21NCAC 56.1600 as applicable.

This day 3/4/2021.

DocuSigned by:
A4304SA2D7AE4CA...

James I. Jeffreys, PE, PLS
Professional Land Surveyor L-3828

NOTES:

1. IF FURTHER INFORMATION REGARDING PROJECT CONTROL IS NEEDED PLEASE CONTACT THE LOCATION AND SURVEYS UNIT.
2. PROJECT CONTROL WAS ESTABLISHED USING GNSS, THE GLOBAL NAVIGATION SATELLITE SYSTEM.
3. RIGHT OF WAY MONUMENTATION ESTABLISHED 2/26/2021 TO 3/3/2021 .

REVISIONS

3/4/21

04-MAR-2021 10:54
C:\Projects\BP_Bridges\Catawba_17-0057\LS12-21-007_RW_Sheets\17BP12R62_ls_RW04.dgn
JJeffreys AT_ES_3314619

PROJECT REFERENCE NO.	SHEET NO.
17BP.12.R.62	2A-1
ROADWAY DESIGN ENGINEER	PAVEMENT DESIGN ENGINEER

NORTH CAROLINA PROFESSIONAL SEAL 030453 ENGINEER AARON C. CARVER 2/22/2022

DOCUMENT NOT CONSIDERED FINAL UNLESS ALL SIGNATURES COMPLETED

Mattern & Craig
ENGINEERS·SURVEYORS
12 BROAD STREET
ASHEVILLE, NORTH CAROLINA 28801
(828) 254-2201
FAX (828) 254-4562
NC LIC. NO. C-1154

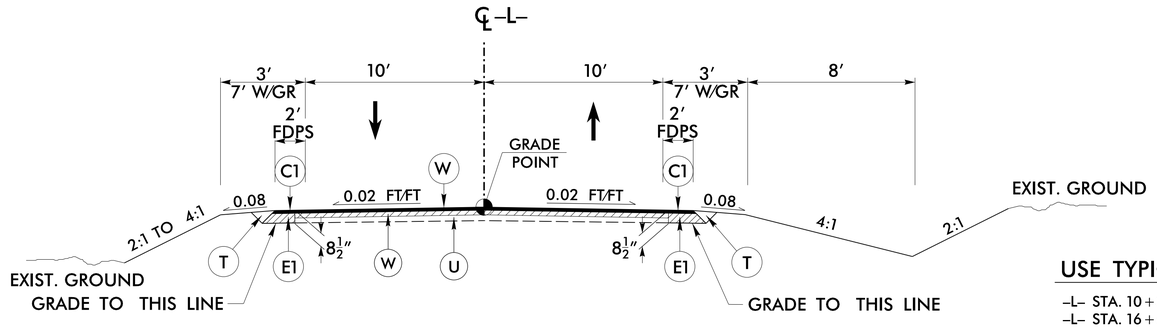

TYPICAL SECTION NO. 1

USE TYPICAL SECTION NO. 1

-L- STA. 10+30 TO -L- STA. 11+15
-L- STA. 16+65 TO -L- STA. 17+50

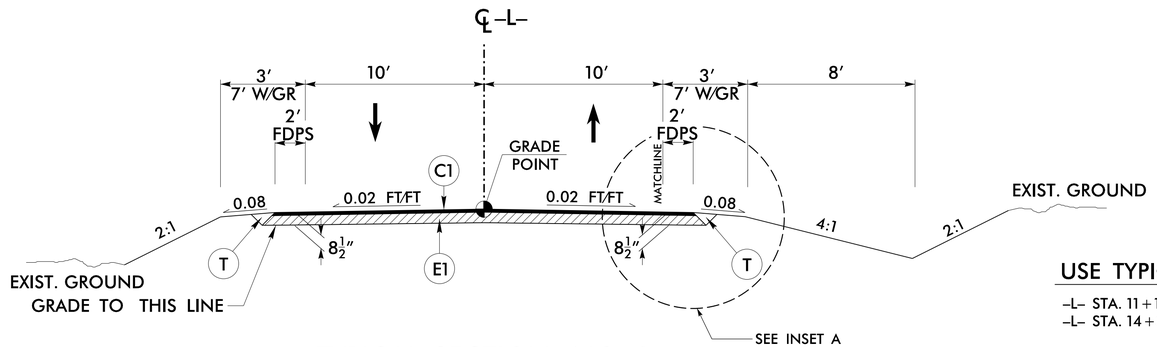

TYPICAL SECTION NO. 2

USE TYPICAL SECTION NO. 2

-L- STA. 11+15 TO -L- STA. 12+85.33 (BEGIN BRIDGE)
-L- STA. 14+31.66 (END BRIDGE) TO -L- STA. 16+65

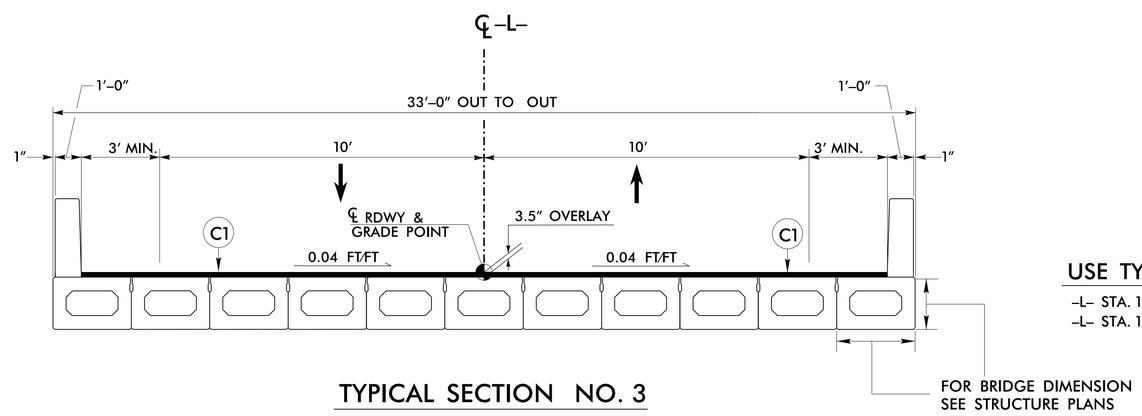

TYPICAL SECTION NO. 3

USE TYPICAL SECTION NO. 3

-L- STA. 12+85.33 (BEGIN BRIDGE) TO
-L- STA. 14+31.66 (END BRIDGE)

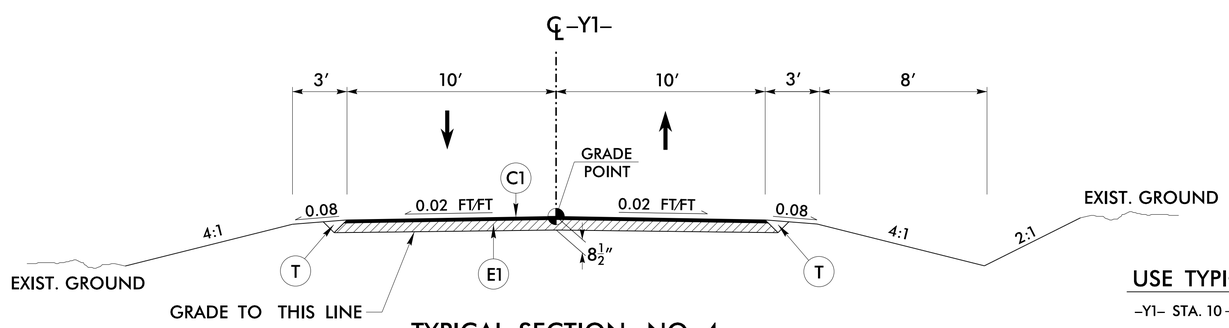

TYPICAL SECTION NO. 4

USE TYPICAL SECTION NO. 4

-Y1- STA. 10+10.25 TO -Y1- STA. 10+70

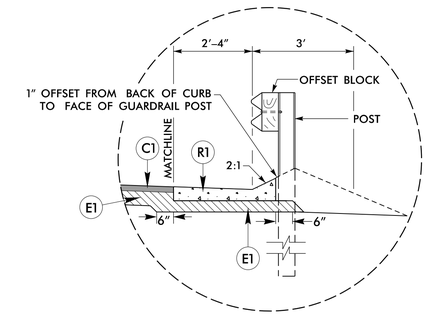

INSET A

SBG -L- STA. 12+20 RT TO BEGIN APPROACH SLAB

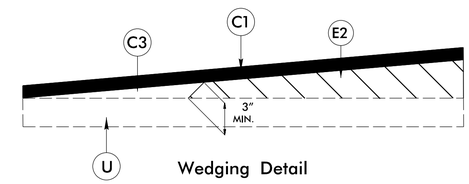

Wedging Detail

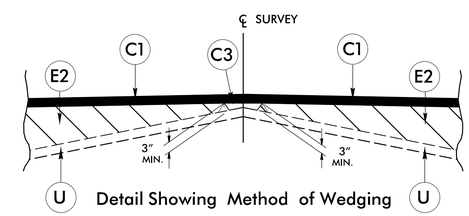

Detail Showing Method of Wedging

PAVEMENT SCHEDULE	
C1	PROP. APPROX. 3.5″ ASPHALT CONCRETE SURFACE COURSE, TYPE S9.5C, AT AN AVERAGE RATE OF 196 LBS. PER SQ. YD. IN EACH OF TWO LAYERS.
C2	PROP. APPROX. 2″ ASPHALT CONCRETE SURFACE COURSE, TYPE S9.5C, AT AN AVERAGE RATE OF 224 LBS. PER SQ. YD.
C3	PROP. VAR. DEPTH ASPHALT CONCRETE SURFACE COURSE, TYPE S9.5C AT AN AVERAGE RATE OF 112 LBS. PER SQ. YD. PER 1″ DEPTH. TO BE PLACED IN LAYERS NOT TO EXCEED 1½″ IN DEPTH.
E1	PROP. APPROX. 5″ ASPHALT CONCRETE BASE COURSE, TYPE B25.0C, AT AN AVERAGE RATE OF 570 LBS. PER SQ. YD.
E2	PROP. VAR. DEPTH ASPHALT CONCRETE BASE COURSE, TYPE B25.0C, AT AN AVERAGE RATE OF 114 LBS. PER SQ. YD. PER 1″ DEPTH. TO BE PLACED IN LAYERS NOT LESS THAN 3″ IN DEPTH OR GREATER THAN 5½″ IN DEPTH.
J1	8″ AGGREGATE BASE COURSE
P	PRIME COAT AT THE RATE OF 0.35 GAL. PER SQ. YD.
R1	SHOULDER BERM GUTTER (NCDOT STANDARD DRAWING NO. 846.01)
T	EARTH MATERIAL
U	EXISTING PAVEMENT
V	INCIDENTAL MILLING
W	PROPOSED WEDGING (SEE APPROPRIATE DETAILS)

NOTE: PAVEMENT EDGE SLOPES ARE 1:1 UNLESS SHOWN OTHERWISE

6/2/99
3:38:59 PM
p:\37508 Catawba 57\06 17BP12R62\Roadway\Proj\17BP12R62_rdy_typ_2A-1.dgn

PROJECT REFERENCE NO.	SHEET NO.
17BP.12.R.62	2A-2
ROADWAY DESIGN ENGINEER	PAVEMENT DESIGN ENGINEER

NORTH CAROLINA PROFESSIONAL SEAL 030453 ENGINEER AARON C. CARVER 2/22/2022

NORTH CAROLINA PROFESSIONAL SEAL 030453 ENGINEER AARON C. CARVER 2/22/2022

DOCUMENT NOT CONSIDERED FINAL UNLESS ALL SIGNATURES COMPLETED

Mattern & Craig
ENGINEERS·SURVEYORS
12 BROAD STREET
ASHEVILLE, NORTH CAROLINA 28801
(828) 254-2201
FAX (828) 254-4562
NC LIC. NO. C-1154

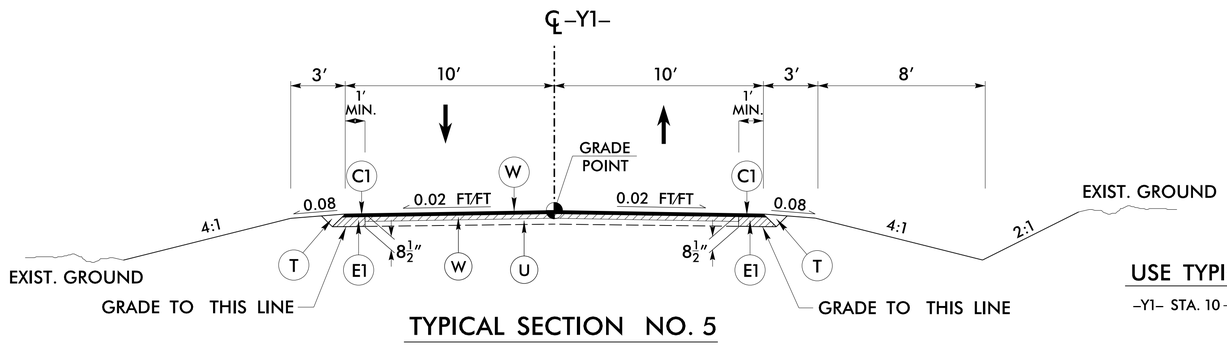

TYPICAL SECTION NO. 5

USE TYPICAL SECTION NO. 5

-Y1- STA. 10+70 TO -Y1- STA. 11+20

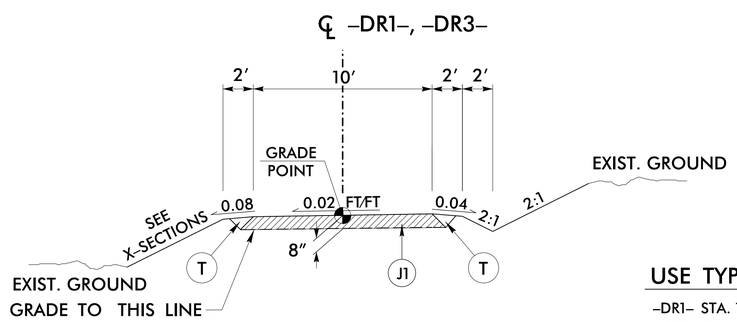

USE TYPICAL SECTION NO. 6

-DR1- STA. 10+10 TO -DR1- STA. 11+55
-DR3- STA. 10+10 TO -DR3- STA. 12+15

TYPICAL SECTION NO. 6

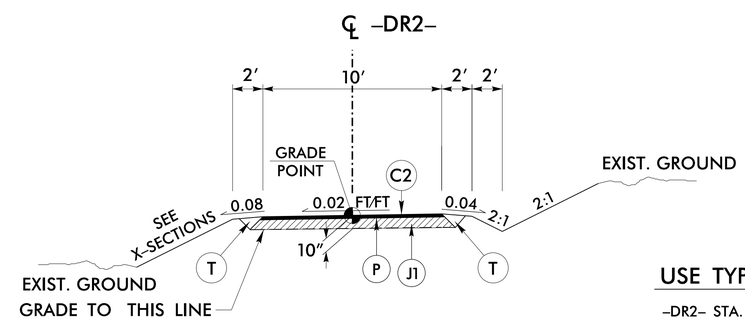

USE TYPICAL SECTION NO. 7

-DR2- STA. 10+00 TO -DR2- STA. 11+20

TYPICAL SECTION NO. 7

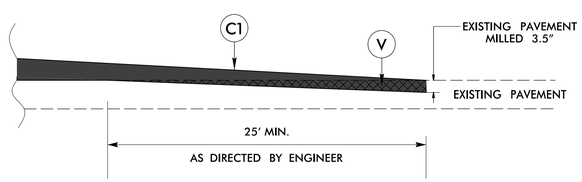

INCIDENTAL MILLING EXISTING PAVEMENT

-L- STA 10+30 TO -L- STA 10+70
-L- STA 17+15 TO -L- STA 17+50
-Y1- STA 11+00 TO -Y1- STA 11+20

PAVEMENT SCHEDULE	
C1	PROP. APPROX. 3.5″ ASPHALT CONCRETE SURFACE COURSE, TYPE S9.5C, AT AN AVERAGE RATE OF 196 LBS. PER SQ. YD. IN EACH OF TWO LAYERS.
C2	PROP. APPROX. 2″ ASPHALT CONCRETE SURFACE COURSE, TYPE S9.5C, AT AN AVERAGE RATE OF 224 LBS. PER SQ. YD.
C3	PROP. VAR. DEPTH ASPHALT CONCRETE SURFACE COURSE, TYPE S9.5C AT AN AVERAGE RATE OF 112 LBS. PER SQ. YD. PER 1″ DEPTH. TO BE PLACED IN LAYERS NOT TO EXCEED 1½″ IN DEPTH.
E1	PROP. APPROX. 5″ ASPHALT CONCRETE BASE COURSE, TYPE B25.0C, AT AN AVERAGE RATE OF 570 LBS. PER SQ. YD.
E2	PROP. VAR. DEPTH ASPHALT CONCRETE BASE COURSE, TYPE B25.0C, AT AN AVERAGE RATE OF 114 LBS. PER SQ. YD. PER 1″ DEPTH. TO BE PLACED IN LAYERS NOT LESS THAN 3″ IN DEPTH OR GREATER THAN 5½″ IN DEPTH.
J1	8″ AGGREGATE BASE COURSE
P	PRIME COAT AT THE RATE OF 0.35 GAL. PER SQ. YD.
R1	SHOULDER BERM GUTTER (NCDOT STANDARD DRAWING NO. 846.01)
T	EARTH MATERIAL
U	EXISTING PAVEMENT
V	INCIDENTAL MILLING
W	PROPOSED WEDGING (SEE APPROPRIATE DETAILS)

NOTE: PAVEMENT EDGE SLOPES ARE 1:1 UNLESS SHOWN OTHERWISE

6/2/99
3:40:10 PM
I:\3790B Catawba 57\06 17BP12R62\Roadway\Proj\17BP12R62_rdy_typ_2A-2.dgn
accarver

DocuSign Envelope ID: 3747C076-B468-4E1E-AE0C-F872A828F2BE

PROJECT REFERENCE NO.	SHEET NO.
17BP.12.R.62	2C-1

DOCUMENT NOT CONSIDERED FINAL UNLESS ALL SIGNATURES COMPLETED

STATE OF NORTH CAROLINA
DEPT. OF TRANSPORTATION
DIVISION OF HIGHWAYS
RALEIGH, N.C.

ROADWAY DETAIL DRAWING FOR
GUARDRAIL INSTALLATION

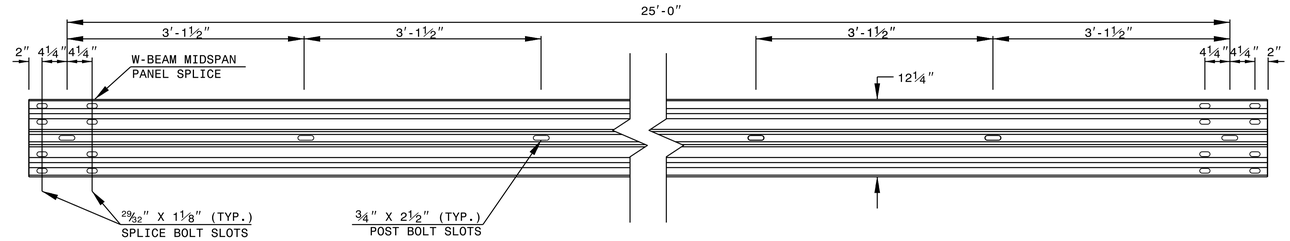

STANDARD W-BEAM GUARDRAIL

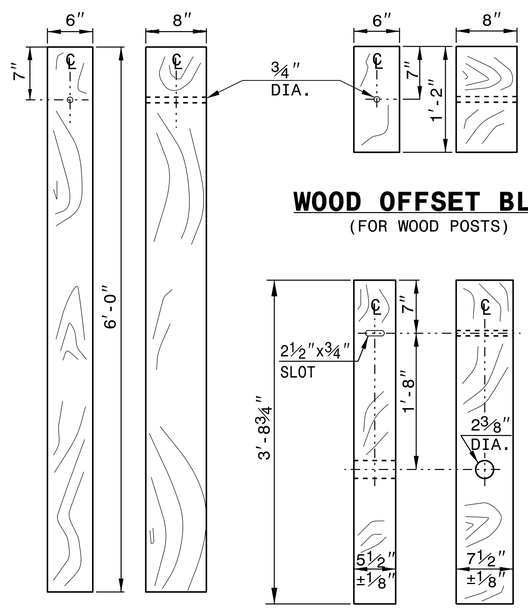

STANDARD LINE POST

WOOD OFFSET BLOCK
(FOR WOOD POSTS)

SHORT WOOD BREAKAWAY POST

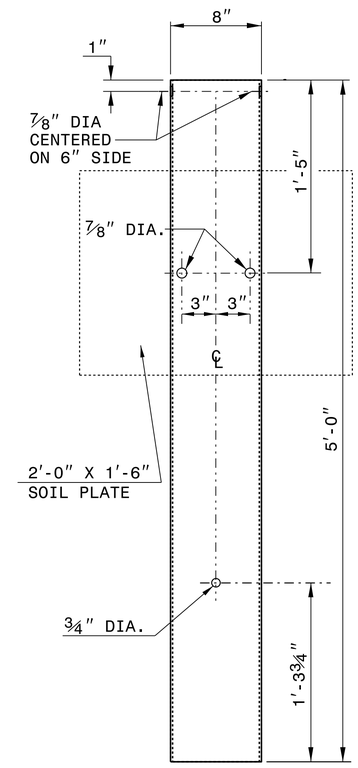

STEEL TUBE
TS 6"x8"x0.1875"

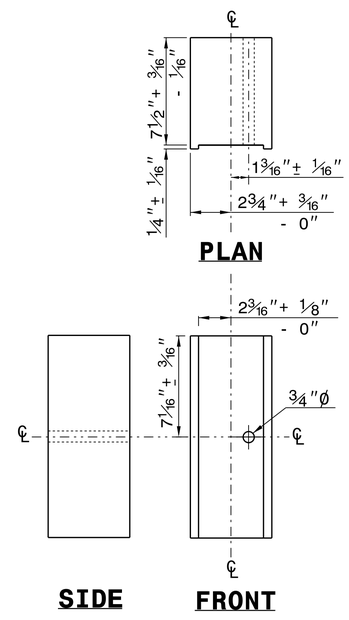

ROUTED OFFSET BLOCK

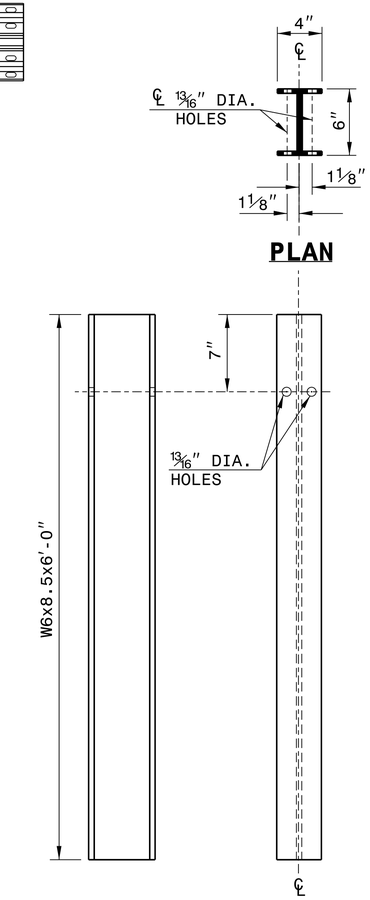

"W6" STEEL POST

SYSTEM PARTS

SHEET 6 OF 8
862D02

STATE OF NORTH CAROLINA
DEPT. OF TRANSPORTATION
DIVISION OF HIGHWAYS
RALEIGH, N.C.

ROADWAY DETAIL DRAWING FOR
GUARDRAIL INSTALLATION

SHEET 6 OF 8
862D02

CONTRACTS STANDARDS AND DEVELOPMENT UNIT
Office 919-707-6950 FAX 919-250-4119

SEE TITLE BLOCK

ORIGINAL BY: J.HOWERTON DATE: 3-7-2018
MODIFIED BY: DATE:
CHECKED BY: DATE:
FILE SPEC.:

DocuSign Envelope ID: 374FC076-B468-4E1E-A80C-F872A8382F8E

14-DEC-2017 10:36
S:\Contracts\Contracts\Special Details\jhowerton\Standard Drawings\2018 Standard Drawings\Details in Lieu of Standards\Division 8\0862d0301.dgn
jhowerton AT CSD-292595

STATE OF NORTH CAROLINA
DEPT. OF TRANSPORTATION
DIVISION OF HIGHWAYS
RALEIGH, N.C.

ROADWAY DETAIL DRAWING FOR
STRUCTURE ANCHOR UNITS
GUARDRAIL ANCHOR UNIT, TYPE III
FOR ATTACHMENT TO RAIL ON BRIDGE

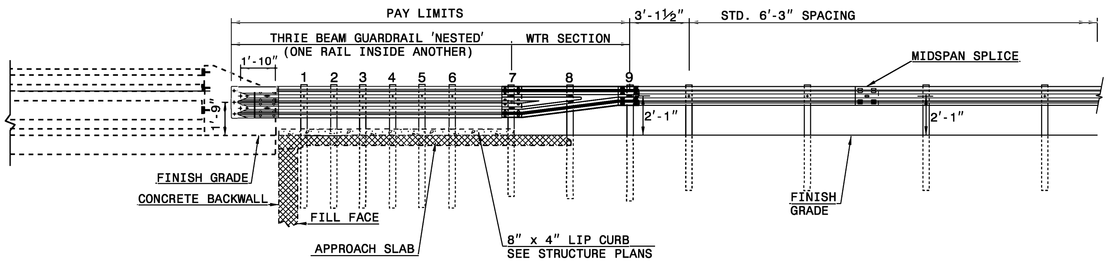

ELEVATION

NOTE:
**POST NOT REQUIRED FOR SKEW ANGLES GREATER THAN 150° OR LESS THAN 30° UNLESS OTHERWISE DIRECTED BY THE ENGINEER.
*THE DISTANCE FROM END OF BRIDGE RAIL TO CENTER LINE OF THE FIRST POST SHOULD BE 11½" IF CONCRETE BACKWALL IS NOT PRESENT.
-SHOULDER BERM GUTTER MUST BE INSTALLED TO THE LIMITS 8" x 4" LIP CURB IS SHOWN IF ANCHOR UNIT IS NOT ADJACENT TO AN APPROACH SLAB.
-MEASURE GUARDRAIL HEIGHT FROM THE TOP OF ADJACENT SURFACE (SHOULDER, BERM, OR GUTTER).
-LAP JOINTS IN THE DIRECTION OF TRAFFIC FLOW.
-SEE SHEET 3 FOR POST SECTIONS 1 THRU 9.

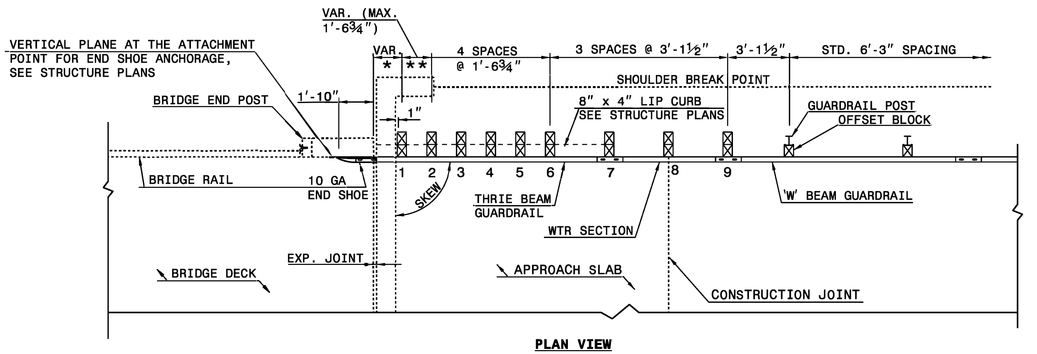

PLAN VIEW

GUARDRAIL ANCHOR UNIT, TYPE III FOR ATTACHMENT TO RAIL ON BRIDGE

SHEET 1 OF 7
862D03

STATE OF NORTH CAROLINA
DEPT. OF TRANSPORTATION
DIVISION OF HIGHWAYS
RALEIGH, N.C.

ROADWAY DETAIL DRAWING FOR
STRUCTURE ANCHOR UNITS
GUARDRAIL ANCHOR UNIT, TYPE III FOR ATTACHMENT TO RAIL ON BRIDGE - SUB REGIONAL TIER

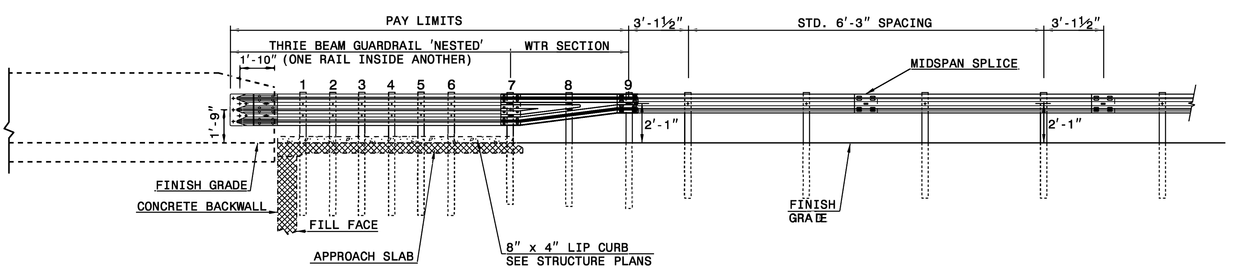

ELEVATION

NOTE:
**POST NOT REQUIRED FOR SKEW ANGLES GREATER THAN 150° OR LESS THAN 30° UNLESS OTHERWISE DIRECTED BY THE ENGINEER.
*THE DISTANCE FROM END OF BRIDGE RAIL TO CENTER LINE OF THE FIRST POST SHOULD BE 11½" IF CONCRETE BACKWALL IS NOT PRESENT.
-SHOULDER BERM GUTTER MUST BE INSTALLED TO THE LIMITS 8" x 4" LIP CURB IS SHOWN IF ANCHOR UNIT IS NOT ADJACENT TO AN APPROACH SLAB.
-MEASURE GUARDRAIL HEIGHT FROM THE TOP OF ADJACENT SURFACE (SHOULDER, BERM, OR GUTTER).
-LAP JOINTS IN THE DIRECTION OF TRAFFIC FLOW.
-SEE SHEET 3 FOR POST SECTIONS 1 THRU 9.

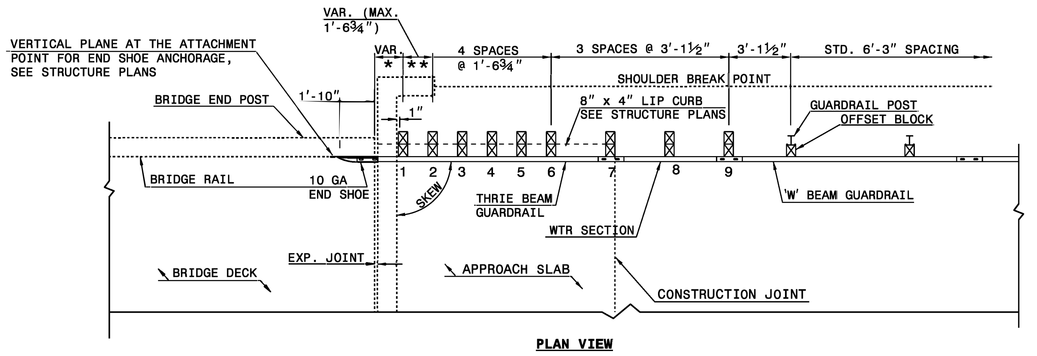

PLAN VIEW

GUARDRAIL ANCHOR UNIT, TYPE III FOR ATTACHMENT TO RAIL ON BRIDGE - SUB REGIONAL TIER

SHEET 2 OF 7
862D03

STATE OF NORTH CAROLINA
DEPT. OF TRANSPORTATION
DIVISION OF HIGHWAYS
RALEIGH, N.C.

ROADWAY DETAIL DRAWING FOR
STRUCTURE ANCHOR UNITS
GUARDRAIL ANCHOR UNIT, TYPE III FOR ATTACHMENT TO RAIL ON BRIDGE - SUB REGIONAL TIER

SHEET 2 OF 7
862D03

SEE TITLE BLOCK

ORIGINAL BY: J. HOWERTON DATE: 06-22-12
MODIFIED BY: DATE:
CHECKED BY: DATE:
FILE SPEC.:

CONTRACT STANDARDS AND DEVELOPMENT UNIT
Office 919-707-6950 FAX 919-250-4119

DOCUMENT NOT CONSIDERED FINAL UNLESS ALL SIGNATURES COMPLETED

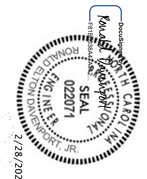

PROJECT REFERENCE NO.: 17BP.12.R.62
SHEET NO.: 2C-2

DocuSign Envelope ID: 346F9F06-522F-4B18-9B0E-2AA810DEB1CF

5/14/99

PROJECT REFERENCE NO.	SHEET NO.
17BP.12.R.62	2C-3

STATE OF NORTH CAROLINA
DEPT. OF TRANSPORTATION
DIVISION OF HIGHWAYS
RALEIGH, N.C.

ENGLISH DETAIL DRAWING FOR
TYPE III - SHOP CURVED STRUCTURE ANCHOR UNIT

SHEET 1 OF 1
TYPE III SC

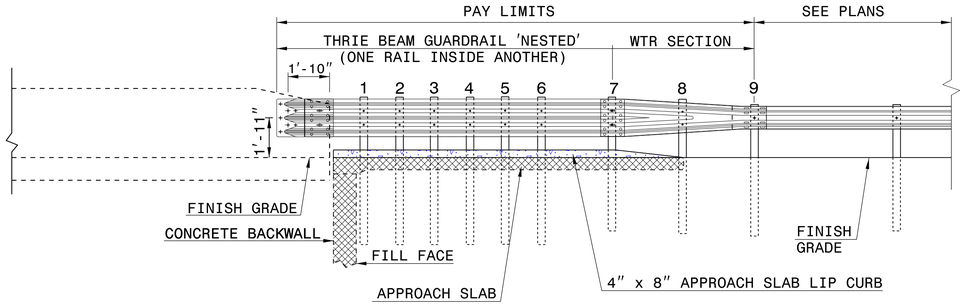

ELEVATION

SEE ROADWAY PLANS FOR END TREATMENT

NOTE:
- **POST NOT REQUIRED FOR SKEW ANGLES GREATER THAN 150° OR LESS THAN 30° UNLESS OTHERWISE DIRECTED BY THE ENGINEER.
- *THE DISTANCE FROM END OF BRIDGE RAIL TO CENTER LINE OF THE FIRST POST SHOULD BE 11½" IF CONCRETE BACKWALL IS NOT PRESENT.
- -SHOULDER BERM GUTTER MUST BE INSTALLED TO THE LIMITS 8" x 4" LIP CURB IS SHOWN IF ANCHOR UNIT IS NOT ADJACENT TO AN APPROACH SLAB.
- -MEASURE GUARDRAIL HEIGHT FROM THE TOP OF ADJACENT SURFACE (SHOULDER, BERM, OR GUTTER).
- -USE NO STEEL POSTS WITHIN THE GUARDRAIL ANCHOR UNIT LIMITS.
- -LAP JOINTS IN THE DIRECTION OF TRAFFIC FLOW.
- -SEE STANDARD 862.03 SHEET 4 FOR POST SECTIONS 1 THRU 9.

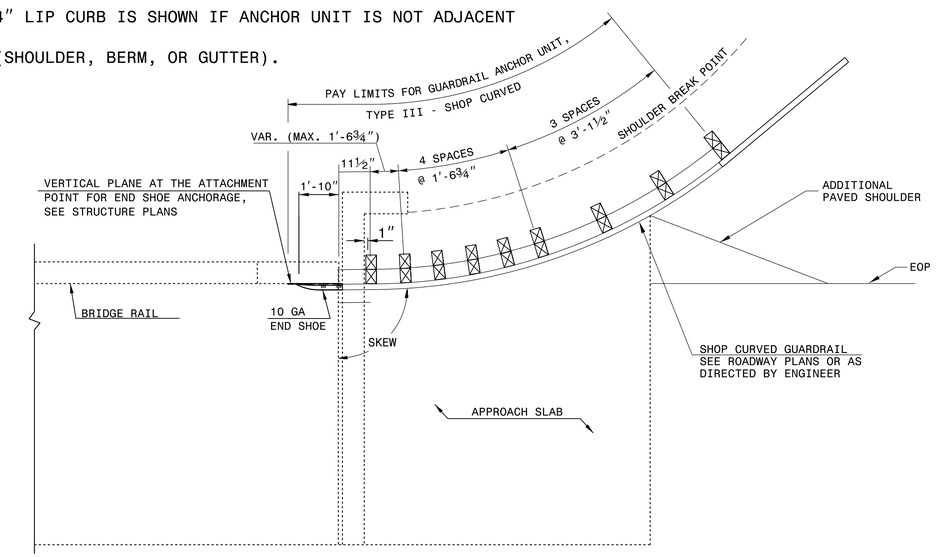

PLAN VIEW

GUARDRAIL ANCHOR UNIT, TYPE III - SHOP CURVED FOR ATTACHMENT TO RAIL ON BRIDGE

STATE OF NORTH CAROLINA
DEPT. OF TRANSPORTATION
DIVISION OF HIGHWAYS
RALEIGH, N.C.

ENGLISH DETAIL DRAWING FOR
TYPE III - SHOP CURVED STRUCTURE ANCHOR UNIT

SHEET 1 OF 1
TYPE III SC

NORTH CAROLINA PROFESSIONAL SEAL 022966 ENGINEER Joel S. Howerton
Joel S. Howerton
449EE2E6522144F...
1/12/2016

DOCUMENT NOT CONSIDERED FINAL UNLESS ALL SIGNATURES COMPLETED

CONTRACT STANDARDS AND DEVELOPMENT UNIT
Office 919-707-6950 FAX 919-250-4119

SEE PLATE FOR TITLE

ORIGINAL BY: E.E.Ward DATE: 4-4-02
MODIFIED BY: T.S.Spell DATE: 5-29-09
CHECKED BY: DATE:
FILE SPEC.: ward:\usr\details\stand\862stds\typeiiisc.dgn

$$$$SYSTIME$$$$
$$$$USERNAME$$$$DGN$$$$

DocuSign Envelope ID: 3747C076-B468-4E1E-AE0C-F872A828F2BE

PROJECT REFERENCE NO.	SHEET NO.
17BP.12.R.62	2C-4

STATE OF
NORTH CAROLINA
DEPT. OF TRANSPORTATION
DIVISION OF HIGHWAYS
RALEIGH, N.C.

ROADWAY DETAIL DRAWING FOR
GUARDRAIL INSTALLATION

SHEET OF

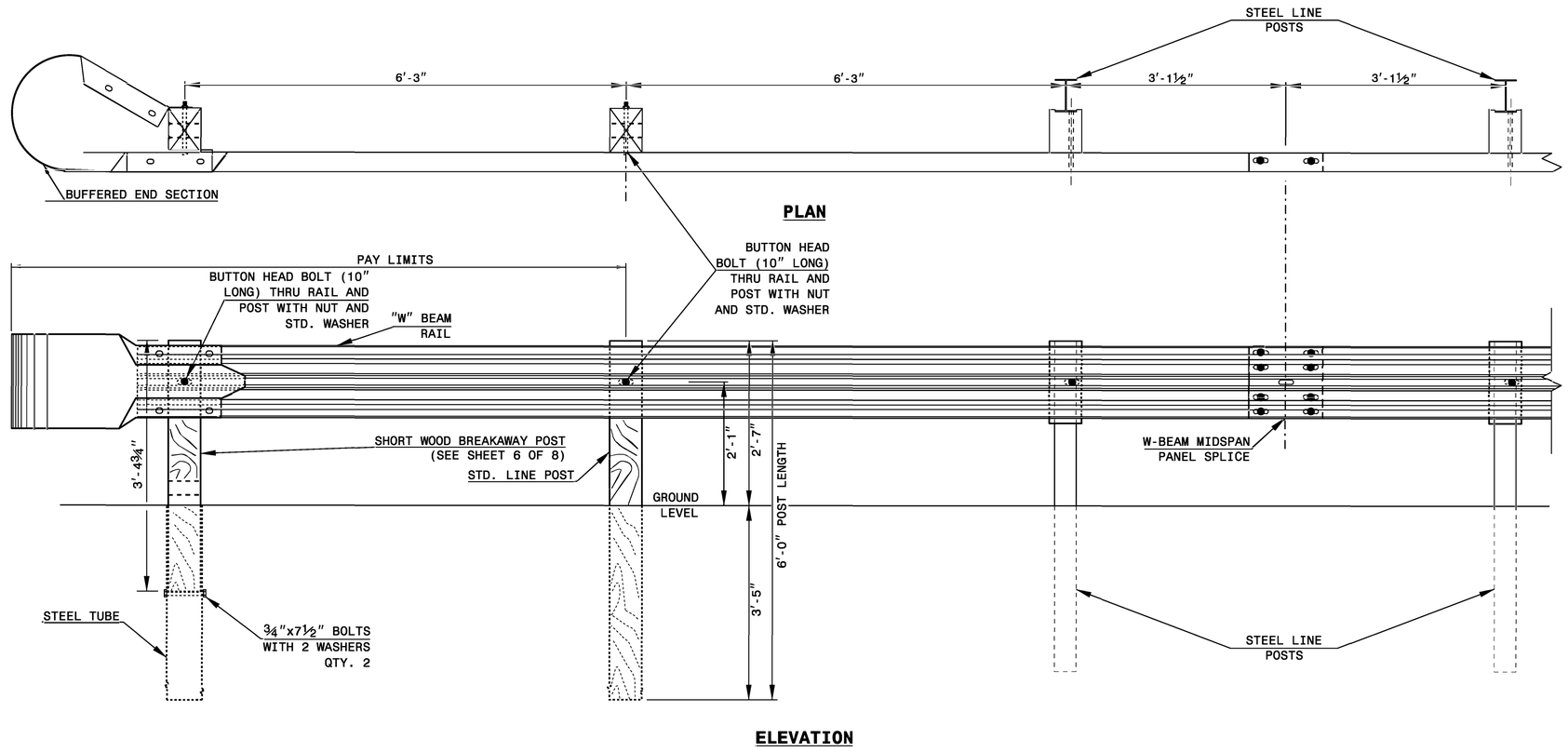

TRAILING END UNIT ASSEMBLY

A.T.-1 SYSTEM

STATE OF
NORTH CAROLINA
DEPT. OF TRANSPORTATION
DIVISION OF HIGHWAYS
RALEIGH, N.C.

ROADWAY DETAIL DRAWING FOR
GUARDRAIL INSTALLATION

SHEET OF

NORTH CAROLINA PROFESSIONAL ENGINEER SEAL 022071 RONALD ELTON DAVENPORT, JR.
2/28/2022

DOCUMENT NOT CONSIDERED FINAL UNLESS ALL SIGNATURES COMPLETED

CONTRACTS STANDARDS AND DEVELOPMENT UNIT
Office 919-707-6950 FAX 919-250-4119

A.T.-1 SYSTEM

ORIGINAL BY: _____ DATE: _____
MODIFIED BY: _____ DATE: _____
CHECKED BY: _____ DATE: _____
FILE SPEC.: _____

6/21/00

COMPUTED BY: VHW	DATE: 3-20-18
CHECKED BY: ACC	DATE: 3-20-18

PROJECT REFERENCE NO.	SHEET NO.
17BP.12.R.62	3B-1

STATE OF NORTH CAROLINA
DIVISION OF HIGHWAYS

PAVEMENT REMOVAL SUMMARY

IN SQUARE YARDS					
LINE	LOCATION	ASPHALT REMOVAL	ASPHALT BREAK-UP	3.5"ASPHALT MILLING	
-L-	10+30 TO 10+70			83	
-L-	11+15 TO 11+50	56			
-L-	11+50 TO 13+19		427		
-L-	14+35 TO 16+15		409		
-L-	16+15 TO 16+55	110			
-L-	17+15 TO 17+50			76	
-Y1-	10+10 TO 10+35		171		
-Y1-	10+35 TO 10+70	128			
-Y1-	11+00 TO 11+20			42	
	TOTAL	294	1007	201	
	SAY	300	1050	210	

SUMMARY OF EARTHWORK

IN CUBIC YARDS					
LOCATION	UNCLASSIFIED EXCAVATION	UNDERCUT	EMBT+%	BORROW	WASTE
SUMMARY NO.1					
-L- STA. 10+30.00 TO STA. 12+85.33 (BEGIN BRIDGE)			2127	2127	
-DR1- STA. 10+10.00 TO STA. 11+55.00	5		907	902	
-DR2- STA. 10+10.00 TO STA. 11+20.00			496	496	
SUBTOTAL SUMMARY NO.1	5		3530	3525	
SUMMARY NO.2					
-L- STA. 14+31.66 (END BRIDGE) TO STA. 17+50.00	1		3067	3066	
-Y1- STA. 10+10.00 TO STA. 11+20.00	1		119	118	
-DR3- STA. 10+10.00 TO STA. 12+15.00			1110	1110	
SUBTOTAL SUMMARY NO.2	2		4296	4294	
PROJECT SUBTOTAL	7		7826	7819	
EST. 5% FOR REPLACING TOP SOIL ON BORROW PITS				390	
GRAND TOTAL	7		7826	8209	
SAY	10			8300	

DDE=365CY
DFILL=360 CY

CONTINGENCY ITEMS:
INCIDENTAL STONE = 50 TONS
UNDERCUT EXCAVATION = 50 CY
SELECT GRANULAR MATERIAL = 50 CY
CLASS IV SUBGRADE STABILIZATION = 50 TONS
GEOTEXTILE FOR SOIL STABILIZATION = 50 SY

Approximate quantities only. Unclassified excavation, borrow excavation, fine grading, clearing and grubbing, and removal of existing pavement will be paid for at the contract lump sum price for "grading".

NOTE: Invert Elevations are for Bid Purposes only and shall not be used for project construction stakeout. See "Standard Specifications For Roads and Structures, Section 300-5".

SUB-REGIONAL & REGIONAL
LIST OF PIPES, ENDWALLS, ETC. (FOR PIPES 48" & UNDER)

STATION / SIZE / THICKNESS OR GAUGE	LOCATION (LT,RT, OR CL)	STRUCTURE NO. FROM	STRUCTURE NO. TO	TOP ELEVATION	INVERT ELEVATION	INVERT ELEVATION	SLOPE CRITICAL	DRAINAGE PIPE (RCP, CSP, CAAP, HDPE, or PVC) 12"	15"	18"	24"	30"	36"	42"	48"	DO NOT USE RCP	DO NOT USE CSP	DO NOT USE CAAP	DO NOT USE HDPE	C.S. PIPE 12"	15"	18"	24"	36"	42"	48"	R.C. PIPE (CLASS III) 15"	18"	24"	30"	36"	42"	48"	R.C. PIPE (CLASS IV) 12"	15"	18"	24"	30"	36"	42"	48"
																				.064	.064	.064	.064	.079	.109	.109																
-DR2- 10+77	LT	401			964.5	963.5																																			
-L- 12+30	RT	402		972.77	969.27																																				
		402	403		969.27	957.78			36							X																									
-L- 12+52	LT																																								
TOTAL									36																																

STATION	*** R.C. PIPE (CLASS V)	*** R.C. PIPE CULVERTS, CONTRACTOR DESIGN PIPE	*** R.C. PIPE CULVERTS, CONTRACTOR DESIGN PIPE	15" SIDE DRAIN PIPE	18" SIDE DRAIN PIPE	ENDWALLS STD. 838.01, STD. 838.11 OR STD. 838.80 (UNLESS NOTED OTHERWISE) CU. YDS. R.C.P.	C.S.P.	QUANTITIES FOR DRAINAGE STRUCTURES * TOTAL L.F. FOR PAY QUANTITY SHALL BE COL. "A" + (1.3 X COL. "B") PER EACH (0' THRU 5.0')	LIN. *FT. A: 5.0' THRU 10.0'	LIN. *FT. B: 10.0' AND ABOVE	C.B. STD. 840.01 OR STD. 840.02	FRAME, GRATES AND HOOD STANDARD 840.03 TYPE OF GRATE E	F	G	CONCRETE TRANSITIONAL SECTION CATCH BASIN	DROP INLET	TBDI STD 840.35	TBDI FRAME WITH TWO GRATES 840.29				MODIFIED CONCRETE FLUME	CORR. STEEL ELBOWS NO. & SIZE	CONC. COLLARS CL. "B" C.Y. STD 840.72	CONC. & BRICK PIPE PLUG, C.Y. STD. 840.71	PIPE REMOVAL LIN.FT.	REMARKS
-DR2- 10+77					76																								
-L- 12+30								1									1	1											
																								2@15"					
-L- 12+52																											48		
TOTAL					76			1									1	1						2@15"			48		

ABBREVIATIONS

C.B.	CATCH BASIN
N.D.I.	NARROW DROP INLET
D.I.	DROP INLET
G.D.I.	GRATED DROP INLET
G.D.I. (N.S.)	GRATED DROP INLET (NARROW SLOT)
J.B.	JUNCTION BOX
M.H.	MANHOLE
T.B.D.I.	TRAFFIC BEARING DROP INLET
T.B.J.B.	TRAFFIC BEARING JUNCTION BOX

"N" = DISTANCE FROM EDGE OF LANE TO FACE OF GUARDRAIL.
TOTAL SHOULDER WIDTH = DISTANCE FROM EDGE OF TRAVEL LANE TO SHOULDER BREAK POINT.
FLARE LENGTH = DISTANCE FROM LAST SECTION OF PARALLEL GUARDRAIL TO END OF GUARDRAIL.
W = TOTAL WIDTH OF FLARE FROM BEGINNING OF TAPER TO END OF GUARDRAIL.
G = GATING IMPACT ATTENUATOR TYPE 350
NG = NON-GATING IMPACT ATTENUATOR TYPE 350

GUARDRAIL SUMMARY

SURVEY LINE	BEG. STA.	END STA.	LOCATION	LENGTH STRAIGHT	LENGTH SHOP CURVED	LENGTH DOUBLE FACED	WARRANT POINT APPROACH END	WARRANT POINT TRAILING END	"N" DIST. FROM E.O.L.	TOTAL SHOUL. WIDTH	FLARE LENGTH APPROACH END	FLARE LENGTH TRAILING END	W APPROACH END	W TRAILING END	ANCHORS XI MOD	XI	GRAU 350	GREU 350 TL-3	IA-350 TL-2	TYPE III	TYPE III SHOP CURVED	B-77	AT-1	IMPACT ATTENUATOR TYPE 350 EA	G	NG	SINGLE FACED GUARDRAIL	REMOVE EXISTING GUARDRAIL	REMOVE AND STOCKPILE EXISTING GUARDRAIL	REMARKS
-L-	10+80	11+80	RT	93.75	25		10+80	11+80	4	7	50	6.25	1	0.25				1					1							
-L-	12+18	12+75	RT	50	25		12+75		3	7	6.25		0.25							1			1							
-L-	12+79	12+97	LT	6.25	31.25			12+75	VARIES	VARIES		6.25									1		1							
-L-	14+38	16+32	LT	193.75			14+38		VARIES	VARIES	25		0.5					1		1										
-L-	14+24	14+90	RT	68.75				14+24	3	7		25		0.5				1		1										
			SUBTOTAL	412.5	81.25																									
			LESS DEDUCTIONS FOR ANCHORS																											
			GREU 350 TL-3 3 @ 50'=	-150																										
			TYPE III 4 @ 18.75'=	-56.25	-18.75																									
			AT-I 3 @ 6.25'=	-18.75																										
			PROJECT TOTALS:	187.5	62.5													3		3	1		3							
			ADDITIONAL GUARDRAIL POSTS=5 EA.																											

PROJECT REFERENCE NO.	SHEET NO.
17BP.12.R.62	4
R/W SHEET NO.	
ROADWAY DESIGN ENGINEER	HYDRAULICS ENGINEER

NORTH CAROLINA PROFESSIONAL SEAL 030453 ENGINEER AARON C. CARVER 2/22/2022

DOCUMENT NOT CONSIDERED FINAL UNLESS ALL SIGNATURES COMPLETED

Mattern & Craig
ENGINEERS·SURVEYORS
12 BROAD STREET
ASHEVILLE, NORTH CAROLINA 28801
(828) 254-2201
FAX (828) 254-4562
NC LIC. NO. C-1154

REVISIONS

8/17/99

SKETCH SHOWING RELATIONSHIP OF PAVEMENT WIDTH TO BRIDGE WIDTH (3' MINIMUM SHOULDER)

NOTE: N.T.S.

DETAIL A
STANDARD 'V' DITCH
(Not to Scale)

Natural Ground, 2:1, D, 2:1, Natural Ground

Min. D = 1 Ft.

DETAIL B
RIP RAP AT EMBANKMENT
(Not to Scale)

Ditch Grade, 5' min., 1.0' min., 1.5', GEOTEXTILE

Type of Liner = 20 TONS, CL II Rip-Rap, Geotextile = 25 sy

FROM -L- STA 13+25 TO STA 13+43 LT

-L- STA 13+40 LT

-L- CURVE DATA	-DR-1- CURVE DATA	-DR-2- CURVE DATA	-DR-2- CURVE DATA
PI Sta 12+90.52	PI Sta 10+54.11	PI Sta 10+37.49	PI Sta 10+87.74
Δ = 39° 35' 33.0" (RT)	Δ = 76° 03' 35.2" (RT)	Δ = 17° 05' 06.5" (RT)	Δ = 49° 33' 19.1" (LT)
D = 7° 57' 27.9"	D = 114° 35' 29.6"	D = 63° 39' 43.1"	D = 71° 37' 11.0"
L = 497.53'	L = 66.37'	L = 26.84'	L = 69.19'
T = 259.16'	T = 39.11'	T = 13.52'	T = 36.93'
R = 720.00'	R = 50.00'	R = 90.00'	R = 80.00'
SE = 04			
RO = 89			
DS = 45 MPH			

-DR-3- CURVE DATA
PI Sta 11+72.43
Δ = 83° 43' 40.3" (RT)
D = 114° 35' 29.6"
L = 73.07'
T = 44.81'
R = 50.00'

-Y1- CURVE DATA
PI Sta 11+23.39
D = 1° 47' 53.2"
D = 2° 51' 53.2"
L = 62.77'
T = 31.39'
R = 2,000.00'

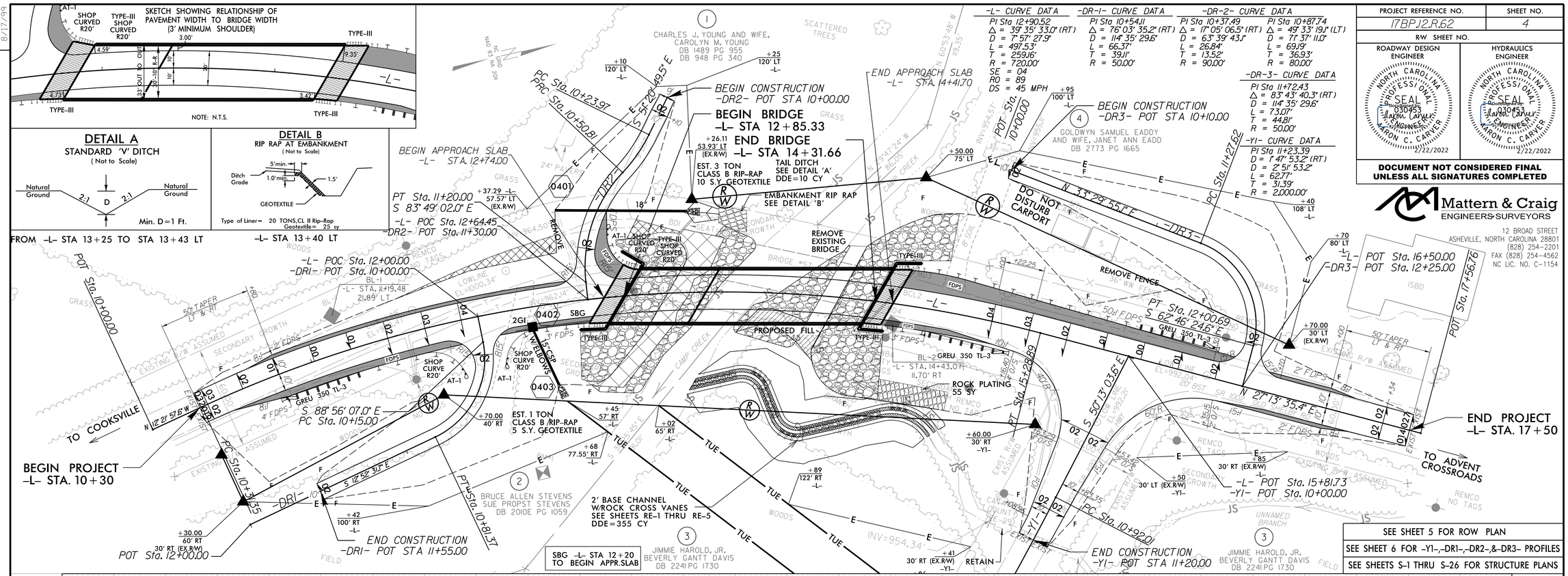

SEE SHEET 5 FOR ROW PLAN

SEE SHEET 6 FOR -Y1-,-DR1-,-DR2-,&-DR3- PROFILES

SEE SHEETS S-1 THRU S-26 FOR STRUCTURE PLANS

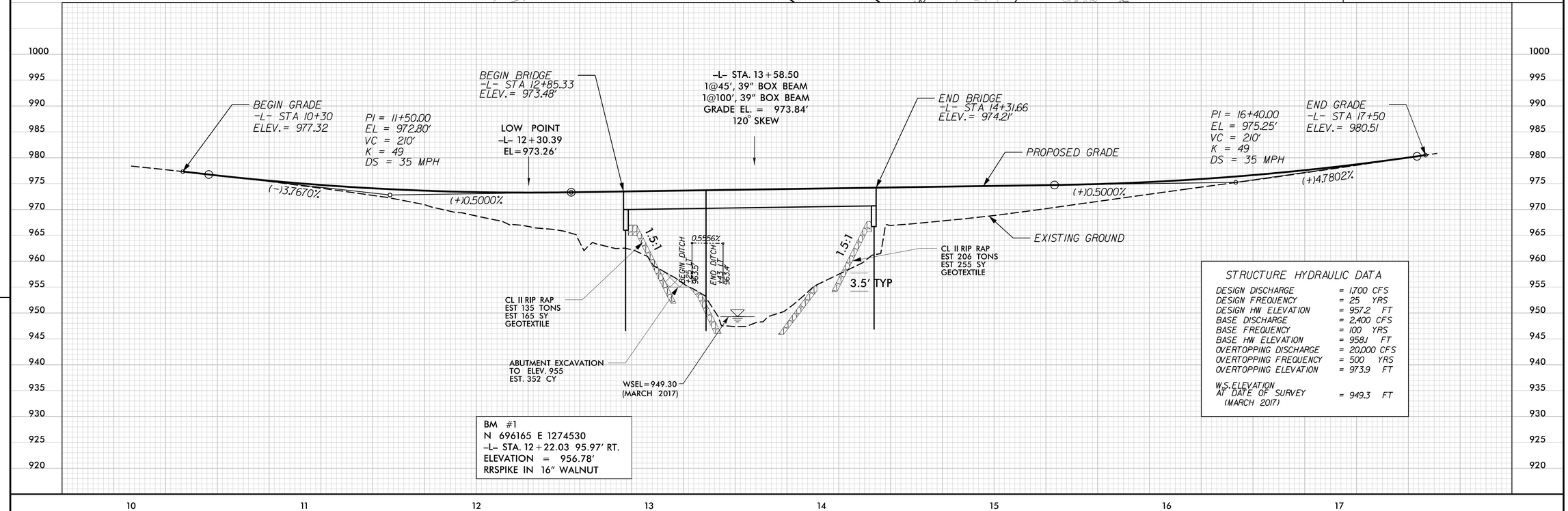

BM #1
N 696165 E 1274530
-L- STA. 12+22.03 95.97' RT.
ELEVATION = 956.78'
RRSPIKE IN 16" WALNUT

STRUCTURE HYDRAULIC DATA

DESIGN DISCHARGE	= 1,700 CFS
DESIGN FREQUENCY	= 25 YRS
DESIGN HW ELEVATION	= 957.2 FT
BASE DISCHARGE	= 2,400 CFS
BASE FREQUENCY	= 100 YRS
BASE HW ELEVATION	= 958.1 FT
OVERTOPPING DISCHARGE	= 20,000 CFS
OVERTOPPING FREQUENCY	= 500 YRS
OVERTOPPING ELEVATION	= 973.9 FT
W.S. ELEVATION AT DATE OF SURVEY (MARCH 2017)	= 949.3 FT

PROJECT REFERENCE NO.	SHEET NO.
17BP.12.R62	5

ROADWAY DESIGN ENGINEER
NORTH CAROLINA PROFESSIONAL SEAL 030453 ENGINEER HARON C. CARTER
2/22/2022

HYDRAULICS ENGINEER
NORTH CAROLINA PROFESSIONAL SEAL 030453 ENGINEER HARON C. CARTER
2/22/2022

DOCUMENT NOT CONSIDERED FINAL UNLESS ALL SIGNATURES COMPLETED

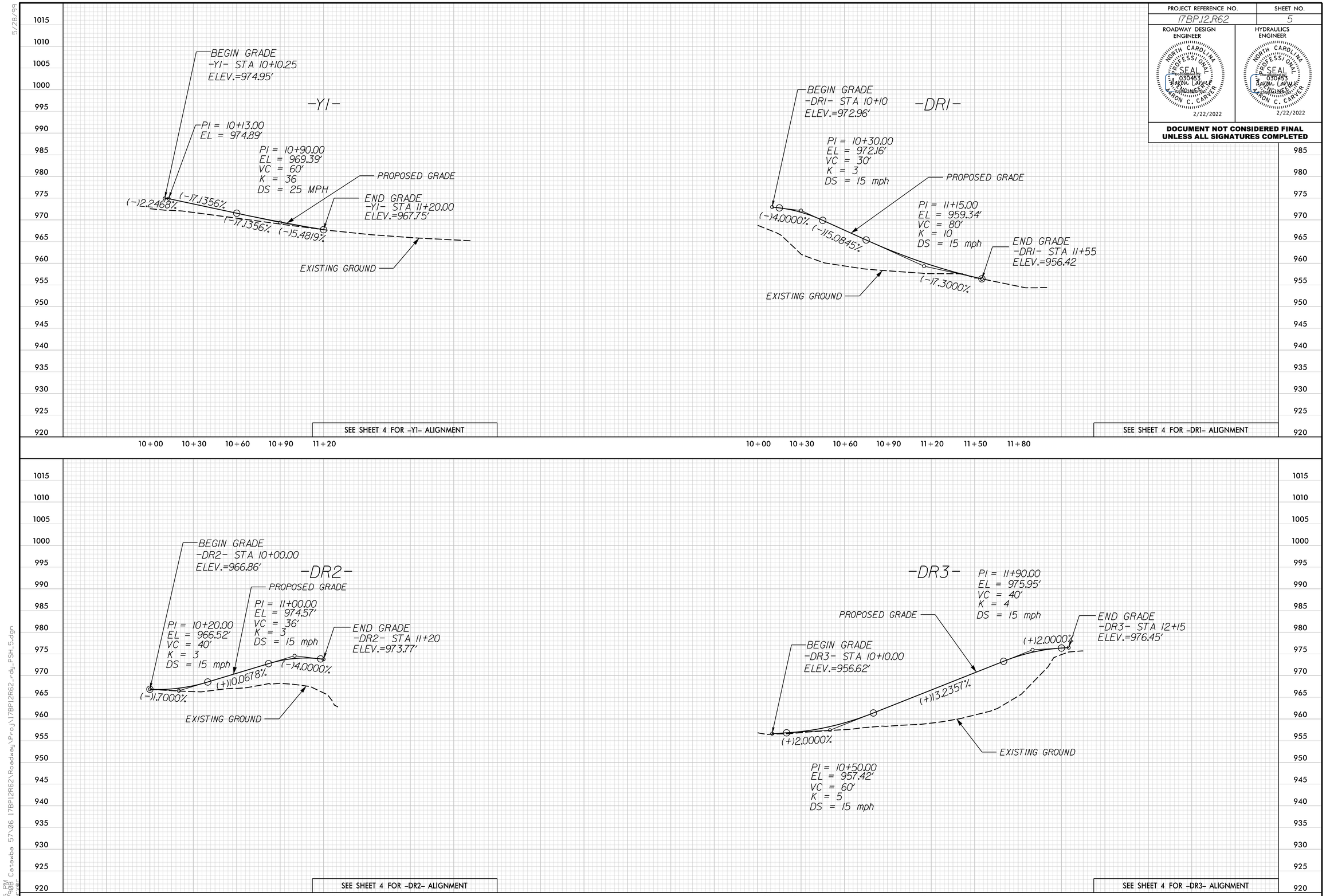

5/28/99

2/17/15 PM
EVISION 1 Catawba 57\06 17BP12R62\Roadway\Proj\17BP12R62_rdy_PSH_5.dgn
DGN VER

STATE OF NORTH CAROLINA
DIVISION OF HIGHWAYS

TRANSPORTATION MANAGEMENT PLAN

CATAWBA COUNTY

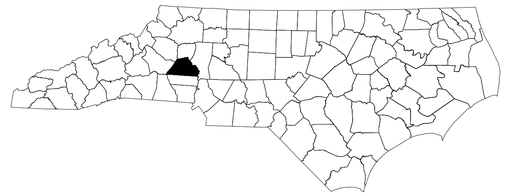

LOCATION: BRIDGE NO. 57 ON SR 1002 (OLD SHELBY RD) OVER CAMP CREEK

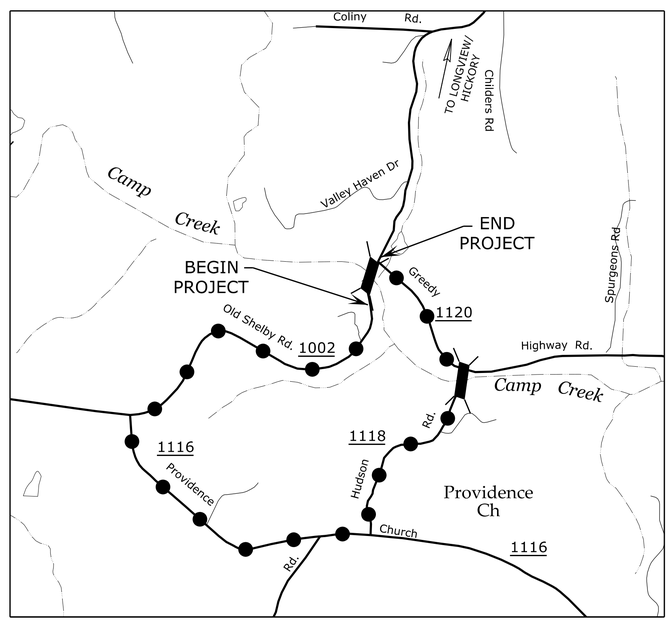

VICINITY MAP

OFF-SITE DETOUR ROUTE

INDEX OF SHEETS

SHEET NO.	TITLE
TMP-1	TITLE SHEET, VICINITY MAP, AND INDEX OF SHEETS
TMP-1A	LIST OF APPLICABLE ROADWAY STANDARD DRAWINGS, LEGEND, AND TRANSPORATION OPERATIONS (GENERAL NOTES AND LOCAL NOTES)
TMP-1B	DETAIL 1204.04: PAVEMENT MARKINGS - INTERSECTIONS SHEET 2 OF 2
TMP-1C	DETAIL 1205.12: PAVEMENT MARKINGS - BRIDGES SHEET 1 OF 1
TMP-2	OFFSITE DETOUR AND ROAD CLOSURE
PM-1	PAVEMENT MARKING PLAN
SD-1	SPECIAL SIGN DESIGN

SHEET NO.
TMP-1

TIP PROJECT: 17BP.12.R.62

DOCUMENT NOT CONSIDERED FINAL UNLESS ALL SIGNATURES COMPLETED

WORK ZONE SAFETY & MOBILITY
"from the MOUNTAINS to the COAST"

PLANS PREPARED BY:

JAMES VOSO, PE

MENG YANG, EI

NCDOT CONTACTS:

STEVEN RACKLEY, PE
PROJECT ENGINEER

PROJECT DESIGN ENGINEER

DIVISION OF HIGHWAYS · STATE OF NORTH CAROLINA · DEPARTMENT OF TRANSPORTATION · WORK ZONE TRAFFIC CONTROL

APPROVED: DocuSigned by: James Voso 140FD60379E041F...

DATE: 2/21/2022

SEAL

NORTH CAROLINA PROFESSIONAL SEAL 022599 ENGINEER JAMES B. VOSO

3:13:09 PM
I:\3790B_Catawba 57\06 17BP12R62\Traffic\TrafficControl\TCP\17BP12R62_TC_TMP-1.dgn
accarver

PROJ. REFERENCE NO.	SHEET NO.
17BP.12.R.62	TMP-1A

ROADWAY STANDARD DRAWINGS

THE FOLLOWING ROADWAY STANDARDS AS SHOWN IN "ROADWAY STANDARD DRAWINGS" - N.C. DEPARTMENT OF TRANSPORTATION - RALEIGH, N.C., DATED JANUARY 2018 ARE APPLICABLE TO THIS PROJECT AND BY REFERENCE HEREBY ARE CONSIDERED A PART OF THESE PLANS:

STD. NO.	TITLE
1101.01	WORK ZONE WARNING SIGNS
1101.02	TEMPORARY LANE CLOSURES
1101.03	TEMPORARY ROAD CLOSURES
1101.04	TEMPORARY SHOULDER CLOSURES
1101.11	TRAFFIC CONTROL DESIGN TABLES
1110.01	STATIONARY WORK ZONE SIGNS
1130.01	DRUMS
1135.01	CONES
1145.01	BARRICADES
1180.01	SKINNY - DRUM
1205.01	PAVEMENT MARKINGS - LINE TYPES AND OFFSETS
1205.02	PAVEMENT MARKINGS - TWO LANE AND MULTILANE ROADWAYS
1205.08	PAVEMENT MARKINGS - SYMBOLS & WORD MESSAGES
1250.01	RAISED PAVEMENT MARKERS - INSTALLATION SPACING
1251.01	RAISED PAVEMENT MARKERS - (PERMANENT AND TEMPORARY)
1261.01	GUARDRAIL AND BARRIER DELINEATORS - INSTALLATION SPACING
1261.02	GUARDRAIL AND BARRIER DELINEATORS - TYPES AND MOUNTING
1262.01	GUARDRAIL END DELINEATION

LEGEND

GENERAL

NORTH ARROW

TRAFFIC CONTROL DEVICES

BARRICADE (TYPE III)

TEMPORARY SIGNING

STATIONARY SIGN

MANAGEMENT STRATEGIES

THE FOLLOWING LISTED WORK ZONE STRATEGIES ARE RECOMMENDED FOR INCLUSION WITHIN THIS TRANSPORTATION MANAGEMENT PLAN (TMP).

RECOMMENDED STRATEGIES

FULL ROADWAY CLOSURES
OFF-SITE DETOURS / USE OF ALTERNATIVE ROUTES
LOCAL DETOUR ROUTES

GENERAL NOTES

CHANGES MAY BE REQUIRED WHEN PHYSICAL DIMENSIONS IN THE DETAIL DRAWINGS, STANDARD DETAILS, AND ROADWAY DETAILS ARE NOT ATTAINABLE TO MEET FIELD CONDITIONS OR RESULT IN DUPLICATE OR UNDESIRED OVERLAPPING OF DEVICES. MODIFICATION MAY INCLUDE: MOVING, SUPPLEMENTING, COVERING, OR REMOVAL OF DEVICES AS DIRECTED BY THE ENGINEER.

THE FOLLOWING GENERAL NOTES APPLY AT ALL TIMES FOR THE DURATION OF THE CONSTRUCTION PROJECT EXCEPT WHEN OTHERWISE NOTED IN THE PLAN OR DIRECTED BY THE ENGINEER.

TRAFFIC PATTERN ALTERATIONS

A) NOTIFY THE ENGINEER THIRTY (30) CALENDAR DAYS PRIOR TO ANY TRAFFIC PATTERN ALTERATION.

SIGNING

B) INSTALL ADVANCE WORK ZONE WARNING SIGNS WHEN WORK IS WITHIN 40 FT FROM THE EDGE OF TRAVEL LANE AND NO MORE THAN THREE (3) DAYS PRIOR TO THE BEGINNING OF CONSTRUCTION.

C) PROVIDE SIGNING AND DEVICES REQUIRED TO CLOSE THE ROAD ACCORDING TO THE ROADWAY STANDARD DRAWINGSAND TRAFFIC CONTROL PLANS.

PROVIDE SIGNING REQUIRED FOR THE OFF-SITE DETOUR ROUTE AS SHOWN IN THE TRAFFIC CONTROL PLANS.

D) COVER OR REMOVE ALL SIGNS AND DEVICES REQUIRED TO CLOSE THE ROAD WHEN ROAD CLOSURE IS NOT IN OPERATION.

COVER OR REMOVE ALL SIGNS REQUIRED FOR THE OFF-SITE DETOUR WHEN THE DETOUR IS NOT IN OPERATION.

E) ENSURE ALL NECESSARY SIGNING IS IN PLACE PRIOR TO ALTERING ANY TRAFFIC PATTERN.

TRAFFIC CONTROL DEVICES

F) PLACE TYPE III BARRICADES WITH "ROAD CLOSED" SIGN R-11-2 ATTACHED OF SUFFICIENT LENGTH TO CLOSE ENTIRE ROADWAY

PAVEMENT MARKINGS

G) INSTALL PAVEMENT MARKINGS (PAINT) ON THE FINAL SURFACE OF THE ENTIRE PROJECT.

H) TIE PROPOSED PAVEMENT MARKING LINES TO EXISTING PAVEMENT MARKING LINES.

LOCAL NOTES

LOCAL NOTES:

1) EMERGENCY VEHICLE ACCESS MUST BE MAINTAINED AT ALL TIMES.

2) NOTIFY CATAWBA COUNTY EMERGENCY SERVICES AND CATAWBA COUNTY SCHOOL BOARD 30 DAYS PRIOR TO ANY LANE AND/OR ROAD CLOSURES.

Mattern & Craig
ENGINEERS SURVEYORS
12 BROAD STREET
ASHEVILLE, NORTH CAROLINA 28801
(828) 254-2201
FAX (828) 254-4562
NC LIC. NO. C-1154

APPROVED: DocuSigned by: James Voso 140FD60376E041F...
DATE: 2/21/2022
SEAL
NORTH CAROLINA PROFESSIONAL SEAL 022599 ENGINEER JAMES B. VOSO

DOCUMENT NOT CONSIDERED FINAL UNLESS ALL SIGNATURES COMPLETED

DIVISION OF HIGHWAYS · STATE OF NORTH CAROLINA · DEPARTMENT OF TRANSPORTATION · WORK ZONE TRAFFIC CONTROL

ROADWAY STANDARD DRAWINGS
GENERAL NOTES &
TRANSPORTATION OPERATIONS

3:14:34 PM
I:\3790B_Catawba 57\06 17BP12R62\Traffic\TrafficControl\TCP\17BP12R62_TC_TMP-1A.dgn
accarver

DocuSign Envelope ID: 75BEC8FB-C70B-4160-BEB0-E0BABA0F4C74

TIP NO.	SHEET NO.
17BP.12.R.62	TMP-1B

APPROVED: Matthew V. Springer
DATE: 8/13/2019

SEAL
NORTH CAROLINA PROFESSIONAL SEAL 042546 ENGINEER MATTHEW V. SPRINGER

STATE OF NORTH CAROLINA
DEPT. OF TRANSPORTATION
DIVISION OF HIGHWAYS
RALEIGH, N.C.

8-19

ENGLISH DETAIL DRAWING FOR
PAVEMENT MARKINGS
INTERSECTIONS

TWO-LANE, TWO-WAY ROADWAY

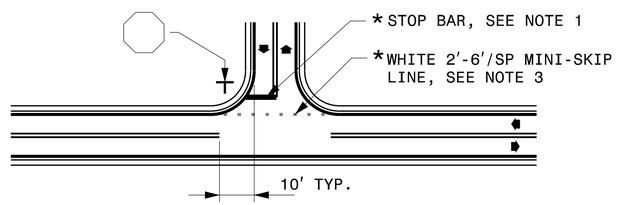

TWO-LANE, TWO-WAY ROADWAY WITH TWO-WAY LEFT TURN LANE

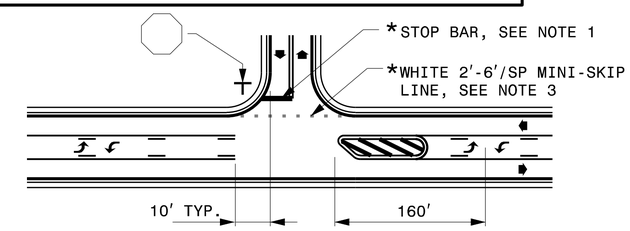

UNDIVIDED MULTI-LANE ROADWAY

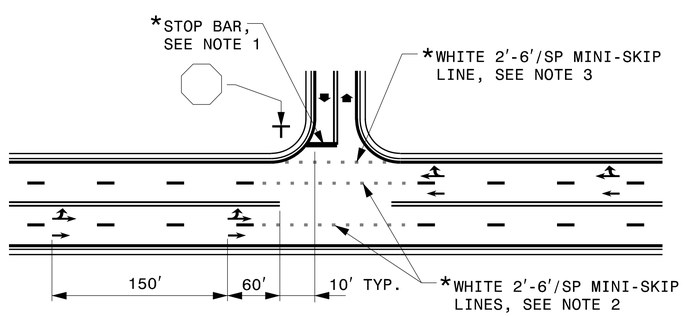

DIVIDED MULTI-LANE ROADWAY WITH TURN BAY

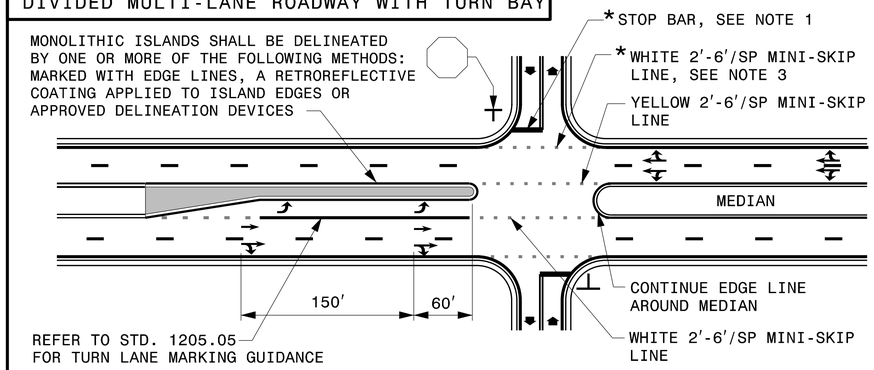

DIVIDED MULTI-LANE ROADWAY WITH WIDE MEDIAN CROSSOVER

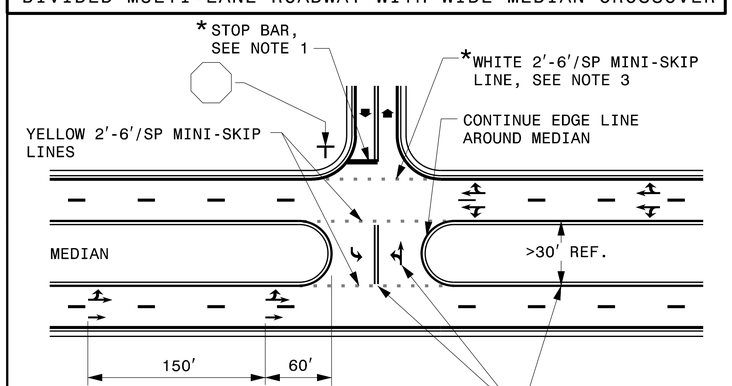

USE DOUBLE YELLOW CENTER LINE AND ARROW SYMBOLS IN MEDIAN CROSSOVER WHEN WIDTH OF MEDIAN EXCEEDS 30 FT, OTHERWISE THEY ARE NOT REQUIRED.

GENERAL NOTES:

1- PLACEMENT OF STOP BARS AT NON-SIGNALIZED INTERSECTIONS IS OPTIONAL AND USED WHERE IT IS IMPORTANT TO INDICATE THE POINT WHICH VEHICLES ARE REQUIRED TO STOP. PLACE STOP BARS NO LESS THAN 4 FEET AND NO MORE THAN 30 FEET FROM THE NEAREST EDGE OF THE INTERSECTING ROADWAY. USE 10 FEET AS THE TYPICAL SETBACK DISTANCE OR AS DIRECTED BY THE ENGINEER.

2- MINI-SKIP LANE LINE EXTENSIONS SHOULD BE USED AT INTERSECTIONS THAT HAVE REDUCED VISIBILITY CONDITIONS SUCH AS OFFSET, SKEWED, OR CURVED ROADWAYS.

3- MINI-SKIP EDGE LINE EXTENSIONS MAY BE PLACED THROUGH INTERSECTIONS AND MAJOR DRIVEWAYS.

4- REFER TO ROADWAY STANDARD DRAWINGS 1205.01, 1205.02, 1205.05, 1205.08 AND 1205.09 FOR ADDITIONAL PAVEMENT MARKING GUIDANCE.

LEGEND

- STOP SIGN
- STATIONARY SIGN
- DIRECTION OF TRAFFIC FLOW
- PAVEMENT MARKING SYMBOLS
- * OPTIONAL

SHEET 2 OF 2
1205D04

STATE OF NORTH CAROLINA
DEPT. OF TRANSPORTATION
DIVISION OF HIGHWAYS
RALEIGH, N.C.

8-19

ENGLISH DETAIL DRAWING FOR
PAVEMENT MARKINGS
INTERSECTIONS

SHEET 2 OF 2
1205D04

REVISED PAVEMENT MARKING ROADWAY STANDARD DRAWING

8/13/19
S:\S&DU\Standards Group\Standards and Drawings\Drawings\2018 Standard Dwgs\Division 12 Final\2050402_08-13-19.dgn
User:dstokes

DocuSign Envelope ID: 75BEC8FB-C70B-4160-BEB0-E0BABA0F4C74

TIP NO.	SHEET NO.
17BP.12.R.62	THP-1C

APPROVED: Matthew V. Springer
DATE: 8/30/2019
DocuSigned by: BC60F0E8B584403...

SEAL
NORTH CAROLINA PROFESSIONAL SEAL 042546 ENGINEER MATTHEW V. SPRINGER

STATE OF NORTH CAROLINA
DEPT. OF TRANSPORTATION
DIVISION OF HIGHWAYS
RALEIGH, N.C.

8-19

ENGLISH DETAIL DRAWING FOR
PAVEMENT MARKINGS
BRIDGES

STANDARD BRIDGE

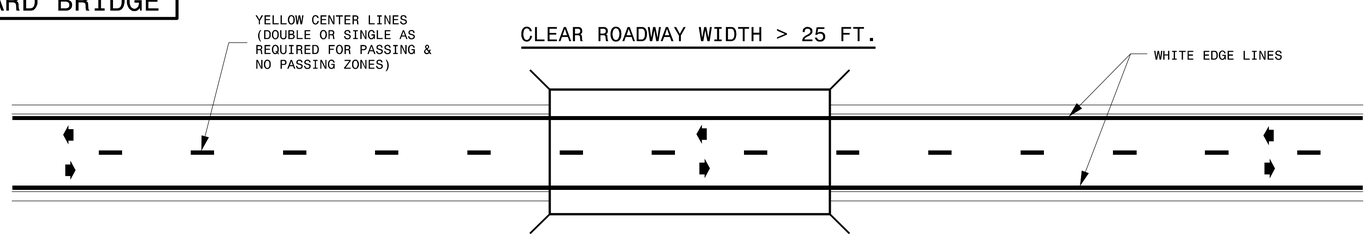

NARROW BRIDGE

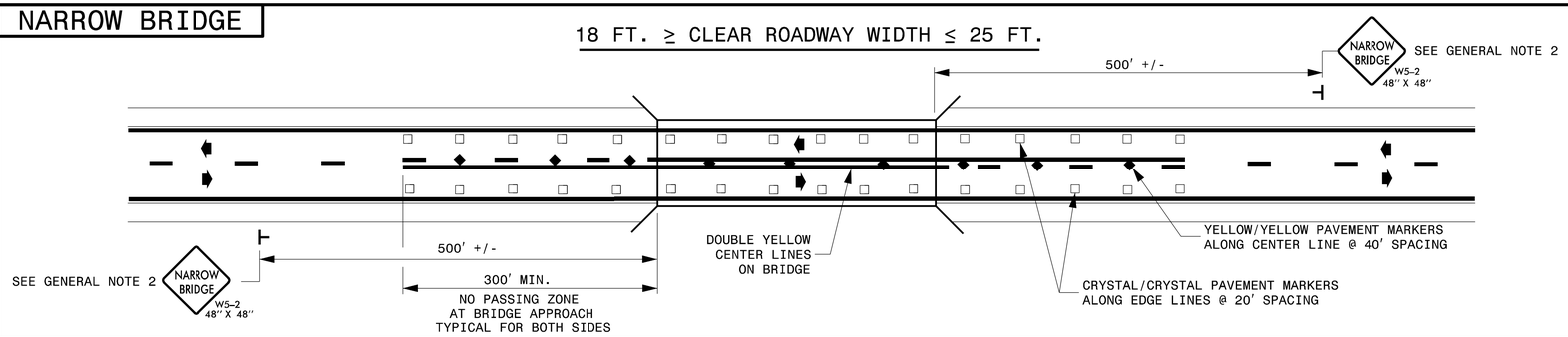

ONE-LANE BRIDGE

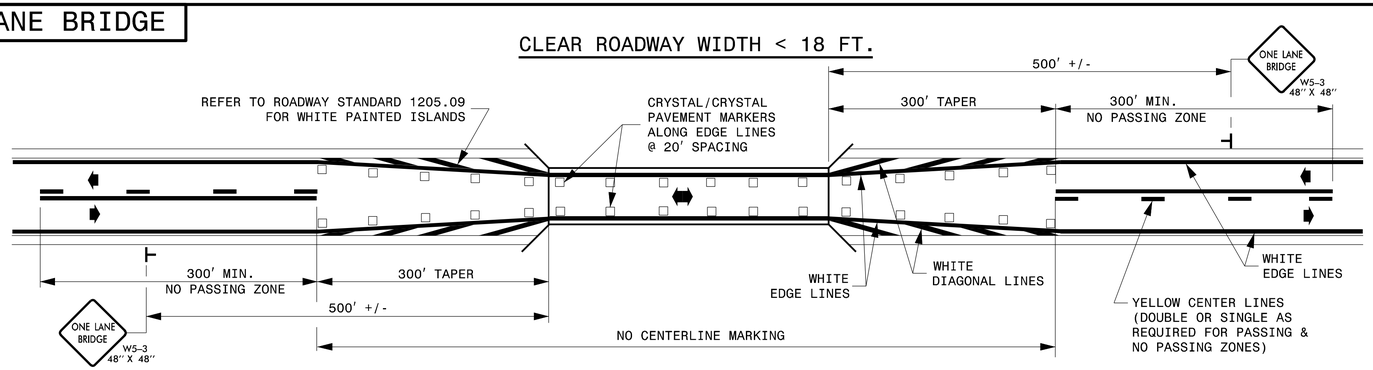

GENERAL NOTES:

1- NO PASSING ZONES SHOWN ARE MINIMUMS. APPLY MINIMUM PASSING AND STOPPING SIGHT DISTANCES AS DETERMINED BY THE ENGINEER.

2- FOR BRIDGES WITH 18 TO 25 FEET CLEAR ROADWAY WIDTH, SIGNS MUST BE USED WHEN THE APPROACH PAVEMENT WIDTH IS 2 FOOT OR GREATER THAN THE CLEAR ROADWAY WIDTH.

LEGEND

- DIRECTION OF TRAFFIC FLOW
- STATIONARY SIGN
- YELLOW/YELLOW PAVEMENT MARKER
- CRYSTAL/CRYSTAL PAVEMENT MARKER

SHEET 1 OF 1
1205D12

STATE OF NORTH CAROLINA
DEPT. OF TRANSPORTATION
DIVISION OF HIGHWAYS
RALEIGH, N.C.

8-19

ENGLISH DETAIL DRAWING FOR
PAVEMENT MARKINGS
BRIDGES

SHEET 1 OF 1
1205D12

REVISED PAVEMENT MARKING ROADWAY STANDARD DRAWING

08/30/19
S:\S&DU\Standards Group\Standards and Drawings\Drawings\2018 Standard Dwgs\Division 12 Final\1205I201_08-29-19.dgn
User:dstokes

PROJ. REFERENCE NO.	SHEET NO.
17BP.12.R.62	TMP-2

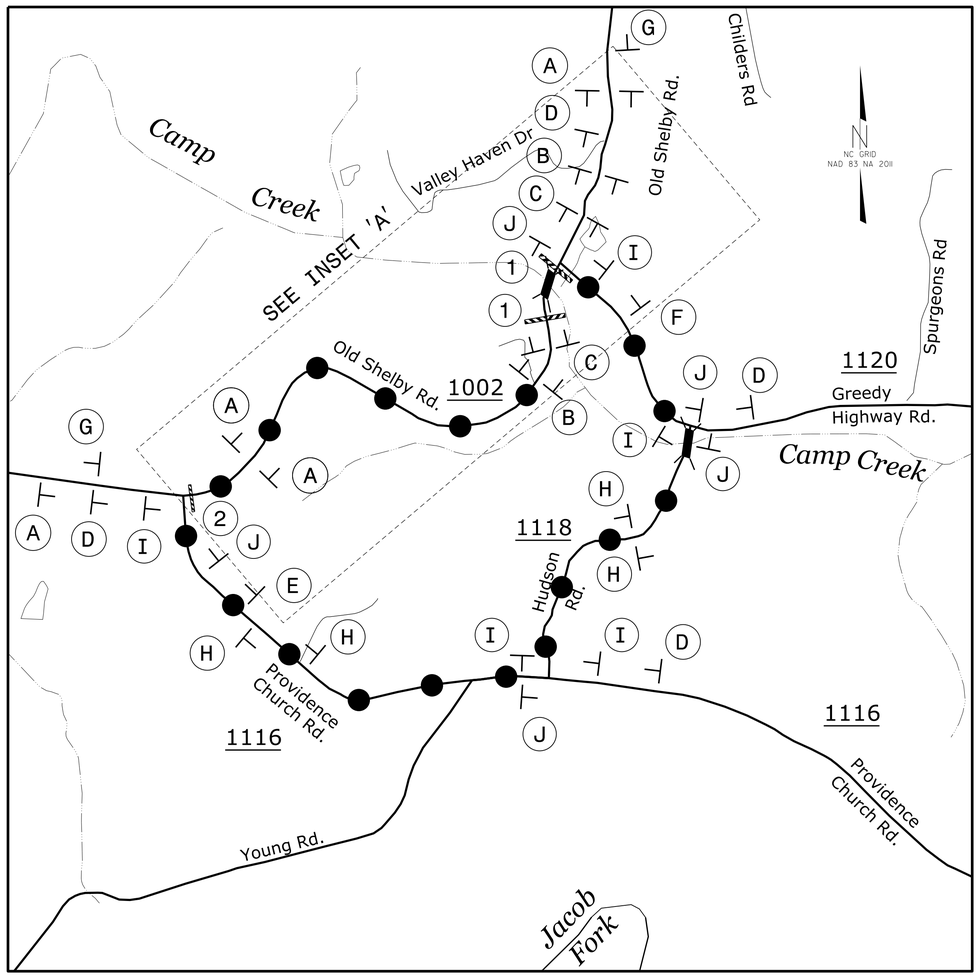

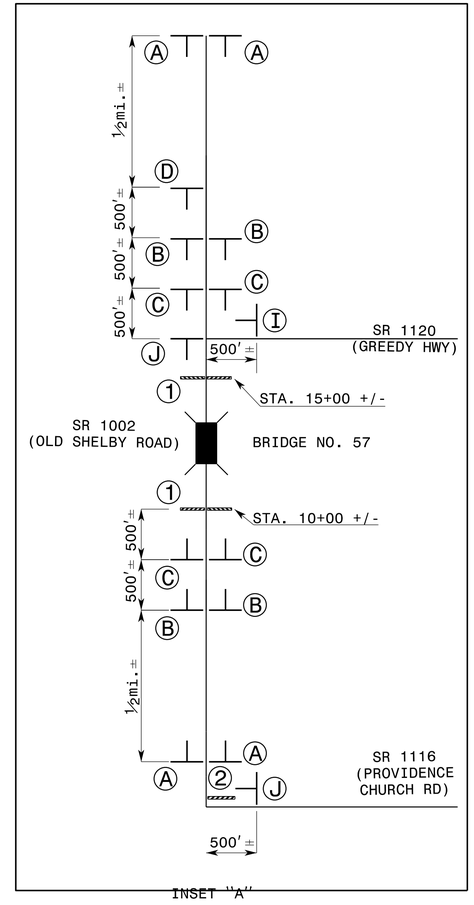

(A) (5 EA)

(B) (4 EA)

(C) (4 EA)

(D) (4 EA)

(E) (1 EA)

NEXT RIGHT SP-4R 42" X 12"

(F) (1 EA)

NEXT LEFT SP-4L 42" X 12"

(G) (2 EA)

(H) (4 EA)

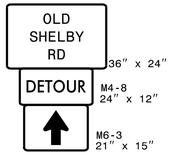

(I) (5 EA)

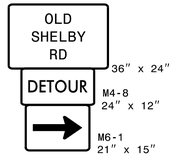

(J) (5 EA)

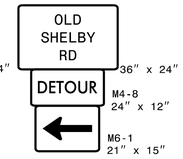

(1) (2 EA)

R11-2
48" x 30"

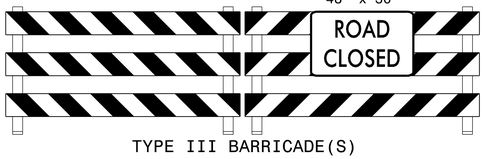

TYPE III BARRICADE(S)

(2) (1 EA)

R11-3
60" x 30"

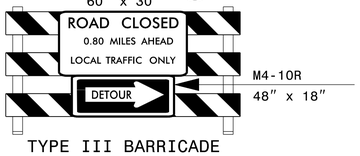

TYPE III BARRICADE

NOTES:

- ALL DETOUR SIGN LOCATIONS ARE APPROXIMATE.
- ALL DETOUR SIGNS ARE BLACK ON ORANGE UNLESS OTHERWISE NOTED.
- TRAFFIC CONTROL DEVICES (A) THROUGH (J) SHALL BE INSTALLED ACCORDING TO ROADWAY STANDARD DRAWING 1101.03, SHEET 1 OF 9.
- TRAFFIC CONTROL DEVICES (1) THROUGH (2) SHALL BE INSTALLED AS PER ENGINEER'S INSTRUCTIONS, AND AS SHOWN HEREON.

* SEE ROADWAY STANDARD DRAWING NO. 1101.03, SHEET 1 OF 9 AND 2 OF 9, FOR ADDITIONAL WORK ZONE SIGNS.

Mattern & Craig
ENGINEERS•SURVEYORS
12 BROAD STREET
ASHEVILLE, NORTH CAROLINA 28801
(828) 254-2201
FAX (828) 254-4562
NC LIC. NO. C-1154

APPROVED: DocuSigned by: James Yoso 140FD60376E041F...

DATE: 2/21/2022

SEAL

NORTH CAROLINA PROFESSIONAL SEAL 022599 ENGINEER JAMES B. YOSO

DOCUMENT NOT CONSIDERED FINAL UNLESS ALL SIGNATURES COMPLETED

DIVISION OF HIGHWAYS STATE OF NORTH CAROLINA DEPARTMENT OF TRANSPORTATION WORK ZONE TRAFFIC CONTROL

OFFSITE DETOUR AND ROAD CLOSURE

3:10:15 PM
pw:\\3790B^Catawba 57\06 17BP12R62\Traffic\TrafficControl\TCP\17BP12R62_TC_TMP-2.dgn
accarver

PROJ. REFERENCE NO.	SHEET NO.
17BP.12.R.62	SD-1

SIGN NUMBER: OLD SHELBY RD
TYPE: D GROUND
QUANTITY: SEE PLANS

SIGN WIDTH: 2′-6″
HEIGHT: 2′-0″
TOTAL AREA: 5.0 Sq.Ft.

BORDER TYPE: FLUSH
RECESS: 0.59″
WIDTH: 0.63″
RADII: 1.5″

NO. Z BARS: N/A
LENGTH: N/A

BACKG COLOR: Fluorescent Orange
COPY COLOR: Black

SYMBOL	X	Y	WID	HT

MAT′L: 0.063″ (1.6 mm) ALUMINUM

DESIGN BY: MY
PROJECT ID: 17BP.12.R.62
CHECKED BY: ACC
DIV: 12
DATE: MAY 17, 2021

USE NOTES: 2, 4

1. Legend and border shall be direct applied encapsulated lens reflective sheeting.
2. Legend and border shall be direct applied enclosed lens reflective sheeting.
3. Shields shall be encapsulated lens reflective sheeting on 0.8mm aluminum and demountable.
4. Background shall be encapsulated lens reflective sheeting.
5. Background shall be enclosed lens reflective sheeting.
6. Center arrows vertically on sign.

BORDER
R=1.5TH
TH=0.63TH
IN=0.47TH

Panel Style: construction_guide.ssi
M.U.T.C.D.: 2009 Edition

LETTER POSITIONS

Letter spacings are to start of next letter

																										Series/Size Text Length
		O	L	D																						C 2000/4
	11	3.2	2.6	2.2	11																					8
		S	H	E	L	B	Y																			C 2000/4
	6.7	2.9	3.1	2.7	2.6	2.6	2.6	6.7																		16.5
		R	D																							C 2000/4
	12.4	2.9	2.3	12.4																						5.2

NORTH CAROLINA D.O.T. SIGN DETAIL

Mattern & Craig
ENGINEERS & SURVEYORS
12 BROAD STREET
ASHEVILLE, NORTH CAROLINA 28801
(828) 254-2201
FAX (828) 254-4562
NC LIC. NO. C-1154

APPROVED: DocuSigned by: James Voso 140FD60378E041F...
DATE: 2/21/2022
SEAL

NORTH CAROLINA PROFESSIONAL SEAL 022599 ENGINEER JAMES B. VOSO

DIVISION OF HIGHWAYS · STATE OF NORTH CAROLINA · DEPARTMENT OF TRANSPORTATION · WORK ZONE TRAFFIC CONTROL

SPECIAL SIGN DESIGN

PROJ. REFERENCE NO.	SHEET NO.
17BP.12.R.62	PM-1

FINAL PAVEMENT MARKING SCHEDULE

SYMBOL	DESCRIPTION	QUANTITY BREAKDOWN	PAY ITEM	TOTAL QUANTITY
		PAVEMENT MARKING LINES		
P5	2FT-6FT/SP WHITE MINISKIP	190 FT	PAINT (4")	380 FT
P61	WHITE STOPBAR (24")	32 FT	PAINT (4")	64 FT
PA	WHITE SOLID EDGE LINE	1,585 FT	PAINT (4")	3,170 FT
PI	YELLOW DOUBLE CENTER LINE	820 FT	PAINT (4")	3,280 FT
		RAISED SNOWPLOWABLE PAVEMENT MARKERS		
ME	YELLOW AND YELLOW	10 EA		

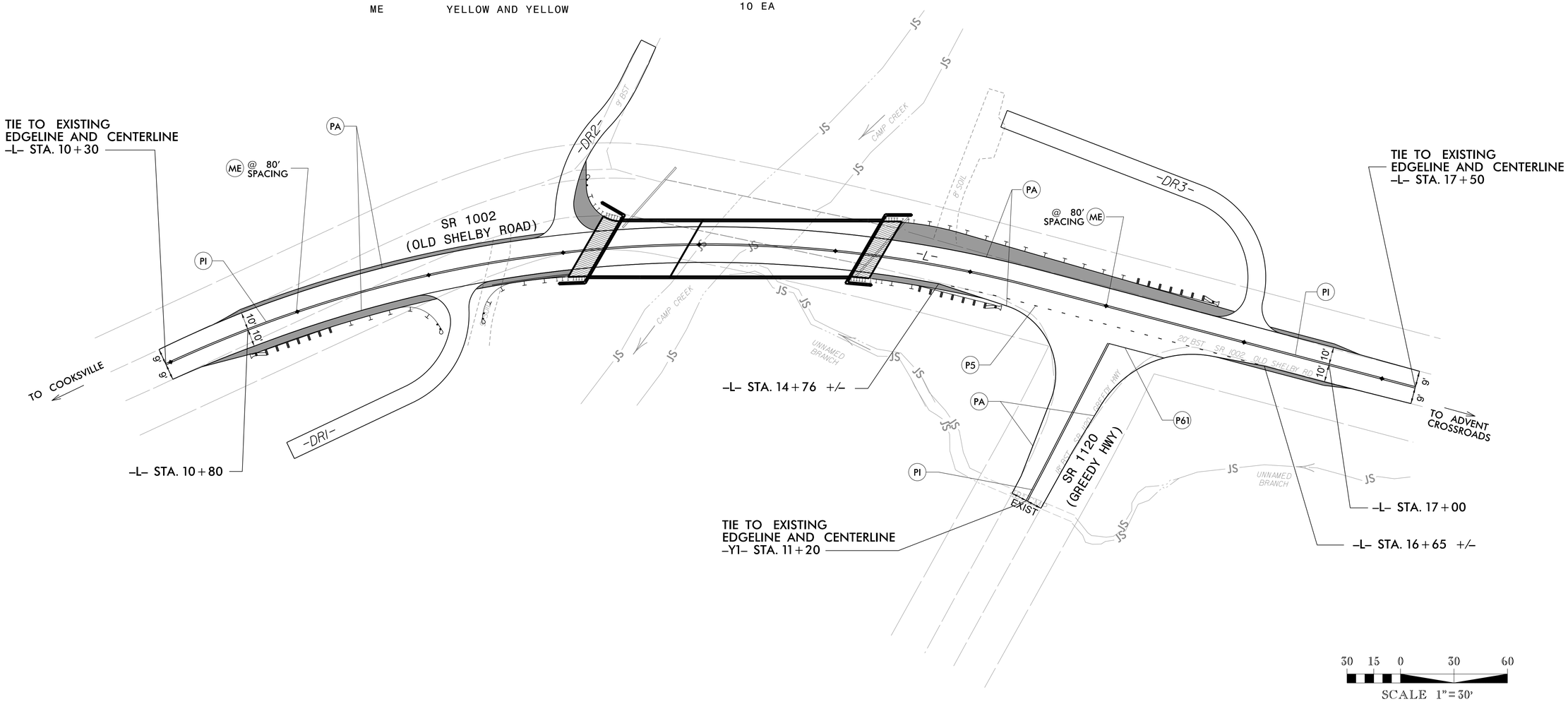

NOTE: APPLY FINAL PAVEMENT MARKING ON -L- SR 1002.
FINAL PAVEMENT MARKINGS = 2 COATS OF PAINT

Mattern & Craig
ENGINEERS & SURVEYORS
12 BROAD STREET
ASHEVILLE, NORTH CAROLINA 28801
(828) 254-2201
FAX (828) 254-4562
NC LIC. NO. C-1154

APPROVED: DocuSigned by: James Voso 140FD60379E041F...

DATE: 2/21/2022

SEAL

NORTH CAROLINA PROFESSIONAL SEAL 022599 ENGINEER JAMES B. VOSO

DOCUMENT NOT CONSIDERED FINAL UNLESS ALL SIGNATURES COMPLETED

DIVISION OF HIGHWAYS · STATE OF NORTH CAROLINA · DEPARTMENT OF TRANSPORTATION · WORK ZONE TRAFFIC CONTROL

PERMANENT PAVEMENT MARKING PLAN

TIP PROJECT: 17BP.12.R.62

STATE	STATE PROJECT REFERENCE NO.	SHEET NO.	TOTAL SHEETS
N.C.	17BP.12.R.62	EC-1	

STATE PROJ. NO.	F.A. PROJ. NO.	DESCRIPTION
17BP.12.PE.62	N/A	P.E.
17BP.12.ROW.62	N/A	R/W & UTIL
17BP.12.R.62	N/A	CONST

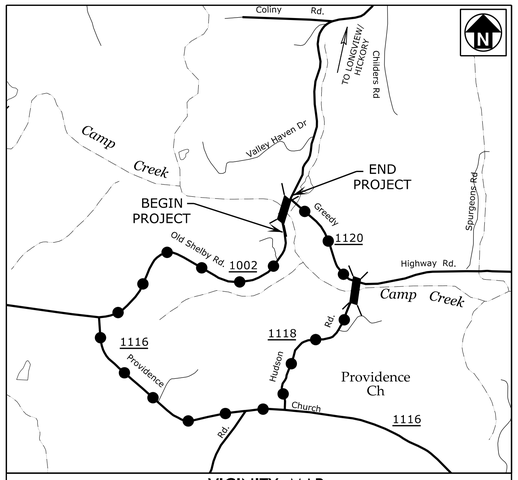

VICINITY MAP
(NOT TO SCALE)
OFF-SITE DETOUR

STATE OF NORTH CAROLINA
DIVISION OF HIGHWAYS

PLAN FOR PROPOSED
HIGHWAY EROSION CONTROL

CATAWBA COUNTY

LOCATION: BRIDGE NO. 57 OVER CAMP CREEK ON SR 1002 (OLD SHELBY ROAD)

TYPE OF WORK: GRADING, PAVING, DRAINAGE, AND STRUCTURE

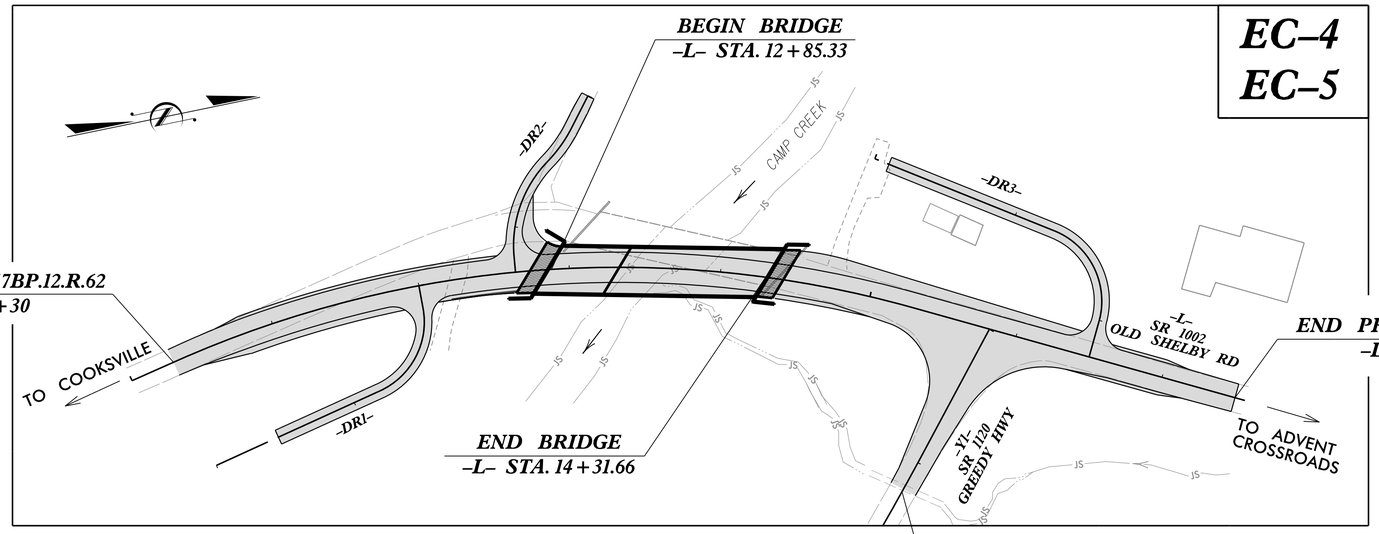

EROSION AND SEDIMENT CONTROL MEASURES

Std. #	Description	Symbol
1630.03	Temporary Silt Ditch	TSD
1630.05	Temporary Diversion	TD
1605.01	Temporary Silt Fence	
1606.01	Special Sediment Control Fence	
1622.01	Temporary Berms and Slope Drains	
1630.02	Silt Basin Type B	
1633.01	Temporary Rock Silt Check Type-A	
	Temporary Rock Silt Check Type-A with Matting and Polyacrylamide (PAM)	
1633.02	Temporary Rock Silt Check Type-B	
	Wattle/ Coir Fiber Wattle	EW CFW
	Wattle/ Coir Fiber Wattle with Polyacrylamide (PAM)	
1634.01	Temporary Rock Sediment Dam Type-A	
1634.02	Temporary Rock Sediment Dam Type-B	
1635.01	Rock Pipe Inlet Sediment Trap Type-A	
1635.02	Rock Pipe Inlet Sediment Trap Type-B	
1630.04	Stilling Basin	
1630.06	Special Stilling Basin	
	Rock Inlet Sediment Trap:	
1632.01	Type A	A
1632.02	Type B	B
1632.03	Type C	C
	Skimmer Basin	
	Tiered Skimmer Basin	
	Infiltration Basin	

THIS PROJECT CONTAINS EROSION CONTROL PLANS FOR CLEARING AND GRUBBING PHASE OF CONSTRUCTION.

GRAPHIC SCALE

30 15 0 30 60

THESE EROSION AND SEDIMENT CONTROL PLANS COMPLY WITH THE REGULATIONS SET FORTH BY THE NCG-010000 GENERAL CONSTRUCTION PERMIT EFFECTIVE APRIL 1, 2019 AND ISSUED BY THE NORTH CAROLINA DEPARTMENT OF ENVIRONMENT AND NATURAL RESOURCES DIVISION OF WATER RESOURCES.

Mattern & Craig
SINCE 1978
CONSULTING ENGINEERS • SURVEYORS
FIRM LICENSE No. C-1154
12 BROAD STREET
ASHEVILLE, NORTH CAROLINA 28801
(828) 254-2201
FAX (828) 254-4562

Prepared in the Office of:

MATTERN & CRAIG

12 BROAD ST.
ASHEVILLE, NC 28801
FOR NCDOT DIVISION OF HIGHWAYS

Designed by:

MENG YANG, EI — ***4149***
NAME — *LEVEL III CERTIFICATION NO.*

STEVEN RACKLEY, PE
NCDOT DIVISION 12 CONTACT

Roadway Standard Drawings

The following roadway english standards as appear in "Roadway Standard Drawings"– Roadway Design Unit – N. C. Department of Transportation – Raleigh, N. C., dated January 2018 and the latest revison thereto are applicable to this project and by reference hereby are considered a part of these plans.

1604.01	Railroad Erosion Control Detail	1632.01	Rock Inlet Sediment Trap Type A
1605.01	Temporary Silt Fence	1632.02	Rock Inlet Sediment Trap Type B
1606.01	Special Sediment Control Fence	1632.03	Rock Inlet Sediment Trap Type C
1607.01	Gravel Construction Entrance	1633.01	Temporary Rock Silt Check Type A
1622.01	Temporary Berms and Slope Drains	1633.02	Temporary Rock Silt Check Type B
1630.01	Riser Basin	1634.01	Temporary Rock Sediment Dam Type A
1630.02	Silt Basin Type B	1634.02	Temporary Rock Sediment Dam Type B
1630.03	Temporary Silt Ditch	1635.01	Rock Pipe Inlet Sediment Trap Type A
1630.04	Stilling Basin	1635.02	Rock Pipe Inlet Sediment Trap Type B
1630.05	Temporary Diversion	1640.01	Coir Fiber Baffle
1630.06	Special Stilling Basin	1645.01	Temporary Stream Crossing
1631.01	Matting Installation		

PROJECT REFERENCE NO.	SHEET NO.
17BP.12.R.62	EC-2

TEMPORARY ROCK SILT CHECK TYPE 'A' WITH EXCELSIOR MATTING AND POLYACRYLAMIDE (PAM)

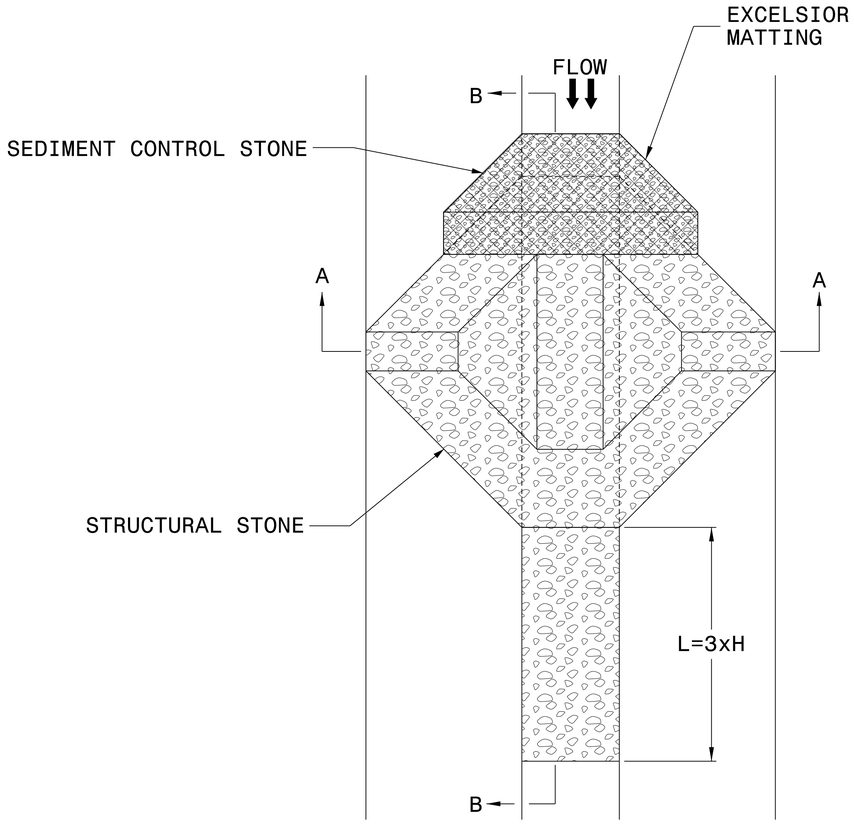

PLAN

NOTES

USE EXCELSIOR FOR MATTING MATERIAL AND ANCHOR MATTING SECTION AT TOP AND BOTTOM WITH CLASS B STONE.

PRIOR TO POLYACRYLAMIDE (PAM) APPLICATION, OBTAIN A SOIL SAMPLE FROM PROJECT LOCATION, AND FROM OFFSITE MATERIAL, AND ANALYZE FOR APPROPRIATE PAM FLOCCULANT TO BE APPLIED TO EACH ROCK SILT CHECK.

INITIALLY APPLY 3.5 OUNCES OF POLYACRYLAMIDE (PAM) TO TOP OF MATTING SECTION AND AFTER EVERY RAINFALL EVENT THAT EQUALS OR EXCEEDS 0.50 INCHES.

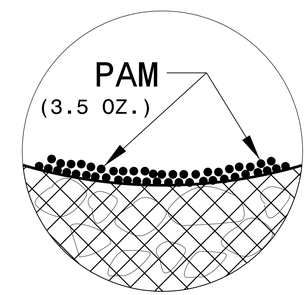

INSET A

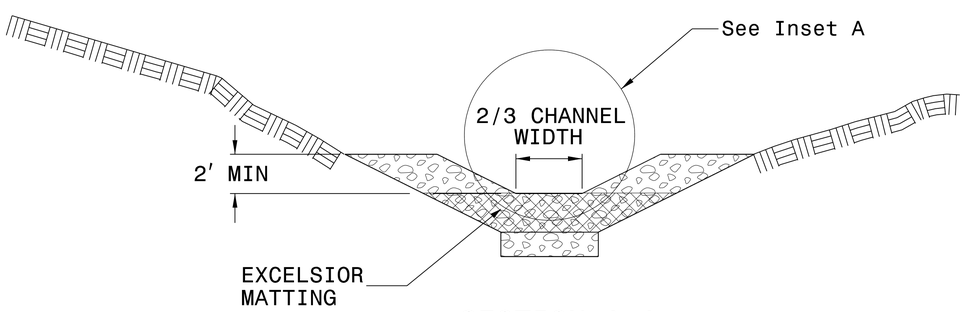

SECTION A-A

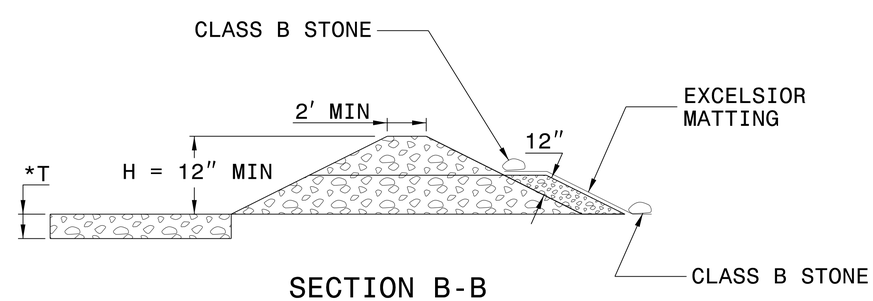

SECTION B-B

*T = 12" MIN., 18" MAX.

NOT TO SCALE

PROJECT REFERENCE NO.	SHEET NO.
17BP.12.R.62	EC-3

DIVISION OF HIGHWAYS
STATE OF NORTH CAROLINA

SOIL STABILIZATION TIMEFRAMES

SITE DESCRIPTION	STABILIZATION TIME	TIMEFRAME EXCEPTIONS
PERIMETER DIKES, SWALES, DITCHES AND SLOPES	7 DAYS	NONE
HIGH QUALITY WATER (HQW) ZONES	7 DAYS	NONE
SLOPES STEEPER THAN 3:1	7 DAYS	IF SLOPES ARE 10' OR LESS IN LENGTH AND ARE NOT STEEPER THAN 2:1, 14 DAYS ARE ALLOWED.
SLOPES 3:1 OR FLATTER	14 DAYS	7 DAYS FOR SLOPES GREATER THAN 50' IN LENGTH.
ALL OTHER AREAS WITH SLOPES FLATTER THAN 4:1	14 DAYS	NONE, EXCEPT FOR PERIMETERS AND HQW ZONES.

SOIL STABILIZATION SUMMARY SHEET

MATTING FOR EROSION CONTROL

CONST SHEET NO.	LINE	FROM STATION	TO STATION	SIDE	ESTIMATE (SY)
				SUBTOTAL	
MISCELLANEOUS MATTING TO BE INSTALLED AS DIRECTED BY THE ENGINEER					
				TOTAL	
				SAY	

PERMANENT SOIL REINFORCEMENT MAT

CONST SHEET NO.	LINE	FROM STATION	TO STATION	SIDE	ESTIMATE (SY)
				SUBTOTAL	
		ADDITIONAL PSRM TO BE INSTALLED			
				TOTAL	
				SAY	

PROJECT REFERENCE NO.	SHEET NO.
17BP.12.R.62	EC4/CONS.4

CLEARING AND GRUBBING EROSION CONTROL FOR CONSTRUCTION SHEET 4

NOTE:
PERIMETER EROSION CONTROL MEASURES SHALL BE INSTALLED DURING CLEARING AND GRUBBIN PHASE

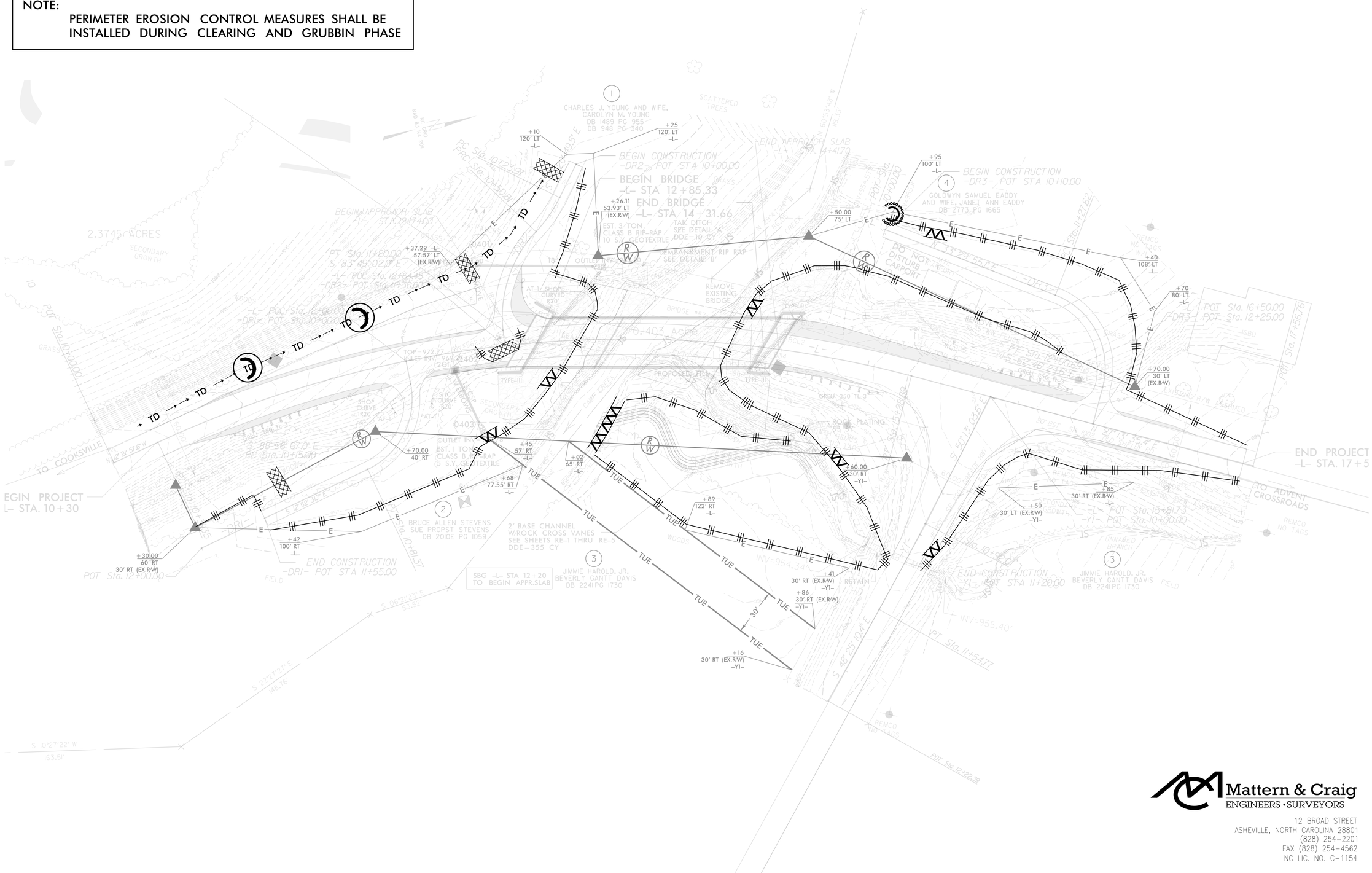

Mattern & Craig
ENGINEERS • SURVEYORS
12 BROAD STREET
ASHEVILLE, NORTH CAROLINA 28801
(828) 254-2201
FAX (828) 254-4562
NC LIC. NO. C-1154

REVISIONS

8/17/99

4:05:51 PM
17BP12R62 Catawba 57\06 17BP12R62\Environmental\EC4.dgn
mlang

PROJECT REFERENCE NO.	SHEET NO.
17BP.12.R.62	EC5/CONS.4

NOTE:
INSTALL TEMPORARY SLOPE DRAINS TO CONVEY RUNOFF FROM ROAD GRADE INTO PROPOSED DITCHES WITH A SPACING OF 1000 FT. OR AS DIRECTED.

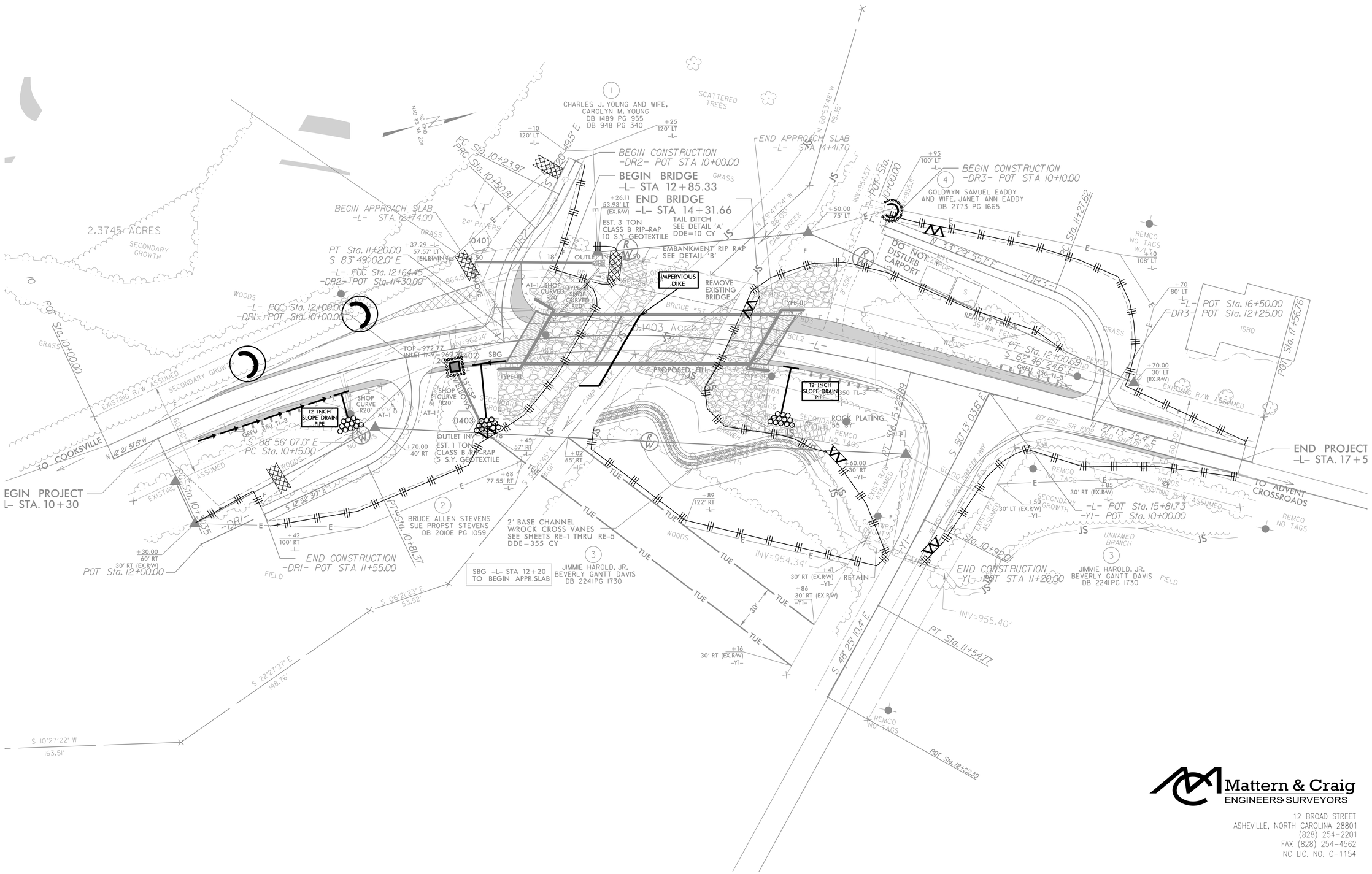

Mattern & Craig
ENGINEERS-SURVEYORS

12 BROAD STREET
ASHEVILLE, NORTH CAROLINA 28801
(828) 254-2201
FAX (828) 254-4562
NC LIC. NO. C-1154

REVISIONS

8/17/99

2:59:14 PM
8/31/2017
Catawba 57\06 17BP12R62\Environmental\EC5.dgn

STATE	STATE PROJECT REFERENCE NO.	SHEET NO.	TOTAL SHEETS
N.C.	17BP.12.R.62	RE-1	

STATE PROJECT NO.	F. A. PROJ. NO.	DESCRIPTION
17BP.12.R.62	N/A	CONST

STATE OF NORTH CAROLINA
DIVISION OF HIGHWAYS

CATAWBA COUNTY

LOCATION: BRIDGE NO.57 OVER CAMP CREEK ON
SR 1002 (OLD SHELBY ROAD)

TYPE OF WORK: GRADING AND DRAINAGE

STREAM RELOCATION PLANS

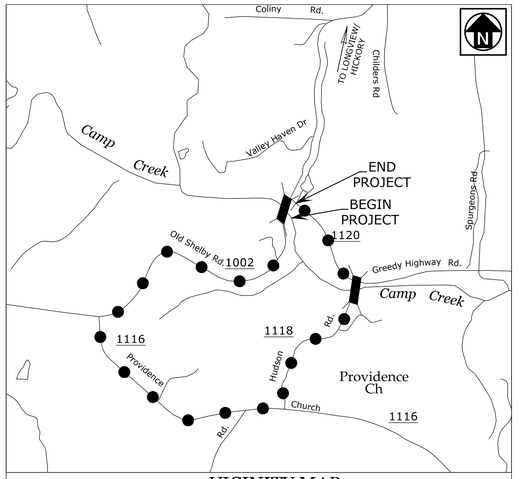

VICINITY MAP
(NOT TO SCALE)
OFF-SITE DETOUR

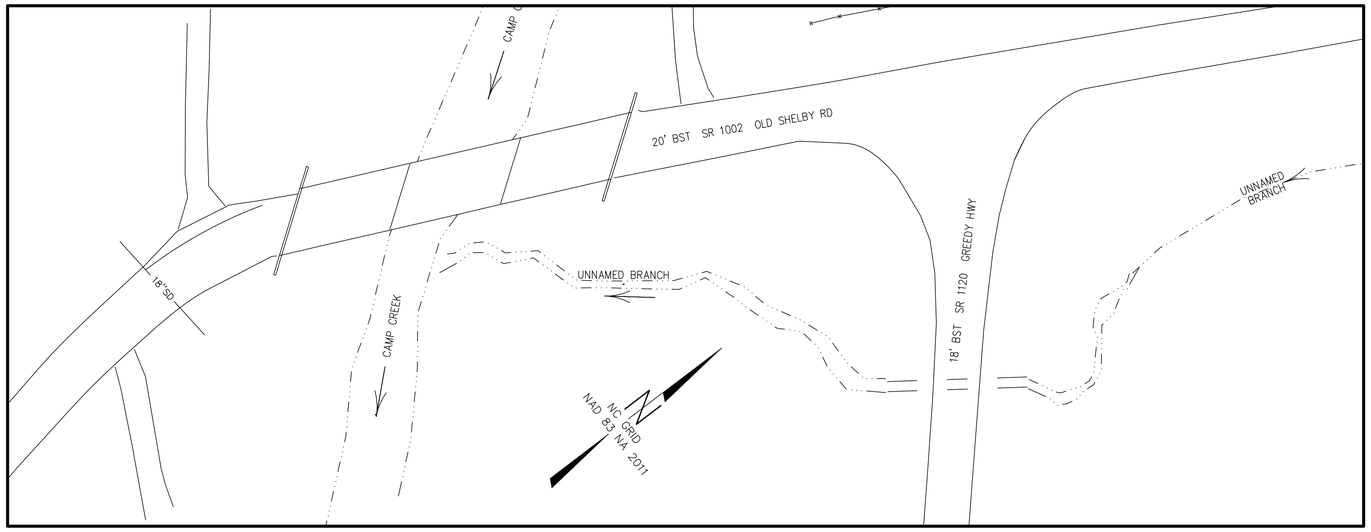

PLANS PREPARED BY:

Mattern & Craig
ENGINEERS• SURVEYORS

12 BROAD STREET
ASHEVILLE, NORTH CAROLINA 28801
(828) 254-2201
FAX (828) 254-4562
NC LIC. NO. C-1154

CLEARING ON THIS PROJECT SHALL BE PERFORMED TO THE LIMITS ESTABLISHED BY METHOD II.

PROJECT: 17BP.12.R.62

CONTRACT:

$$DATE$$
$$TIME$$
$$USERNAME$$

GRAPHIC SCALES

10 5 0 10 20
PLANS

10 5 0 10 20
PROFILE (HORIZONTAL)

2 1 0 2 4
PROFILE (VERTICAL)

DESIGN DATA

ADT 2013 = 1300

T = 6 %
V = 45 MPH

FUNC CLASS =
RURAL MINOR COLLECTOR
SUBREGIONAL TIER

PROJECT LENGTH

LENGTH ROADWAY PROJECT 17BP.12.R.62 = 0.109 MILES

LENGTH STRUCTURE PROJECT 17BP.12.R.62 = 0.027 MILES

TOTAL LENGTH PROJECT 17BP.12.R.62 = 0.136 MILES

Prepared in the Office of:
MATTERN & CRAIG
12 BROAD ST.
ASHEVILLE, NC 28801
FOR NCDOT DIVISION OF HIGHWAYS

2018 STANDARD SPECIFICATIONS

RIGHT OF WAY DATE:
MAY 15, 2018

LETTING DATE:

AARON CARVER, PE
PROJECT ENGINEER

SARAH GREENE, PE
PROJECT DESIGN ENGINEER

NCDOT CONTACT:
STEVE RACKLEY, PE
DIVISION 12 BRIDGE MANAGER

ROADWAY DESIGN ENGINEER

SIGNATURE: P.E.

HYDRAULICS ENGINEER

NORTH CAROLINA PROFESSIONAL SEAL 035097 ENGINEER JACOB D. GREER
11-27-21

SIGNATURE: P.E.

STATE OF NORTH CAROLINA • DEPARTMENT OF TRANSPORTATION

PROJECT REFERENCE NO.	SHEET NO.
17BP.14.R.68	RE-2
R/W SHEET NO.	
ROADWAY DESIGN ENGINEER	HYDRAULICS ENGINEER

NORTH CAROLINA PROFESSIONAL ENGINEER SEAL 035097 JACOB D. GRIEB 11-27-21

8/17/99

REVISIONS

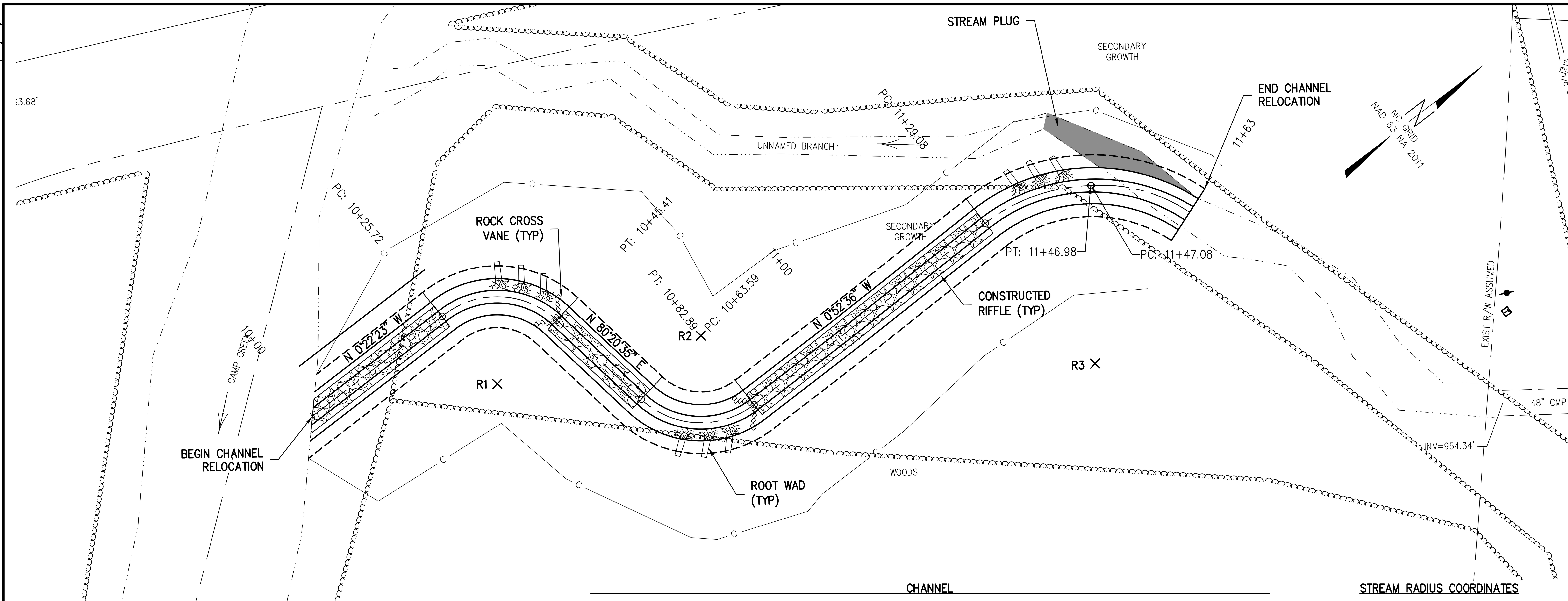

CHANNEL

PI STA	NORTHING	EASTING
10+37.70	696300.19	1274500.85
10+75.23	696307.20	1274542.07
11+38.36	696374.30	1274541.13
11+55.55	696388.96	1274551.30

STREAM RADIUS COORDINATES

	Northing	Easting
R1	696288.689	1274514.9609
R2	696318.7509	1274528.2896
R3	696365.4303	1274569.2871

****
BM1 ELEVATION = 956.78
N 696165 E 1274530
RR SPIKE IN 16" WALNUT
****

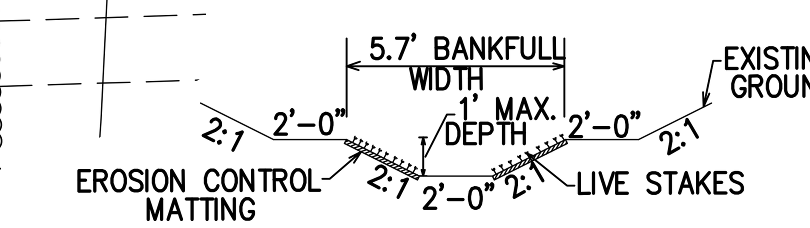

TYPICAL STREAM CROSS-SECTION
(NOT TO SCALE)

LEGEND

- CONSTRUCTED RIFFLE
- ROOT WAD
- STREAM PLUG
- ROCK CROSS VANE

NOTE: GRADING FOR THE STREAM RELOCATION IS INCIDENTAL TO LUMP SUM GRADING

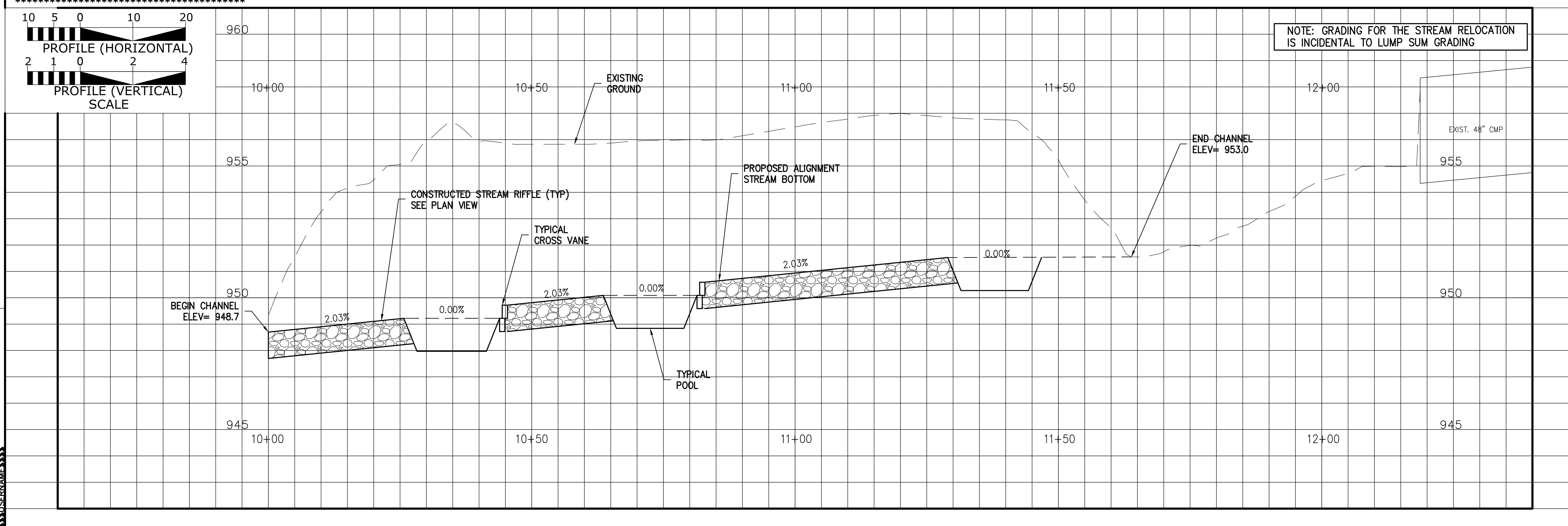

$$$$$$$SYSTIME$$$$$$
$$$$$$DGN$$$$$$$$$$$$$$$$$$$$
$$$$$$USERNAME$$$$$$

8/17/99

PROJECT REFERENCE NO.	SHEET NO.
17BP.14.R.68	RE-3
R/W SHEET NO.	
ROADWAY DESIGN ENGINEER	HYDRAULICS ENGINEER

NORTH CAROLINA PROFESSIONAL SEAL 032007 ENGINEER JACOB D. GRIEB 11-27-17

CHANNEL CONSTRUCTION SEQUENCE

1. CONSTRUCT THE RELOCATED STREAM SECTION IN DRY CONDITIONS.
2. INSTALL A STREAM PLUG AT THE BEGINING AND END OF THE AREA BEING BUILT IN THE DRY. THESE PLUGS WILL BE REMOVED WHEN THE NEW CHANNEL IS STABILIZED WITH MATTING.
3. PROJECT WILL BE CONSTRUCTED FROM THE DOWNSTREAM END STARTING AT THE CONFLUENCE WITH CAMP CREEK WORKING IN THE UPSTREAM DIRECTION.
4. CONSTRUCT THE PROPOSED CHANNEL ACCORDING TO THE CONSTRUCTION PLANS. UTILIZE SPECIAL STILLING BASIN AS NECESSARY TO DE-WATER PROPOSED CHANNEL. UTILIZE PUMP AROUND AS NECESSARY TO CONSTRUCT SCOUR HOLE.
5. STOCKPILE AND SEPERATE ALL SOIL SUITABLE FOR FILL OR TOPSOIL.
6. INSTALL STRUCTURES (IE. CONSTRUCTED RIFFLES AND ROOT WADS).
7. SEED AREAS WITH SEED MIX AND MULCH WHERE COIR FIBER MATTING WILL BE INSTALLED.
8. INSTALL COIR FIBER MATTING.
9. PLANT VEGETATION ACCORDING TO CONSTRUCTION PLANS.
10. REMOVE THE TEMPORARY STREAM PLUGS FROM THE NEWLY CONSTRUCTED CHANNEL, AND DIVERT WATER INTO CONSTRUCTED CHANNEL.
11. INSTALL CHANNEL PLUG INTO ABANDONED CHANNEL.
12. FILL THE ABANDONED CHANNEL WITH SUITABLE MATERIAL APPROVED BY THE ENIGNEER.

10 5 0 10 20
PLAN

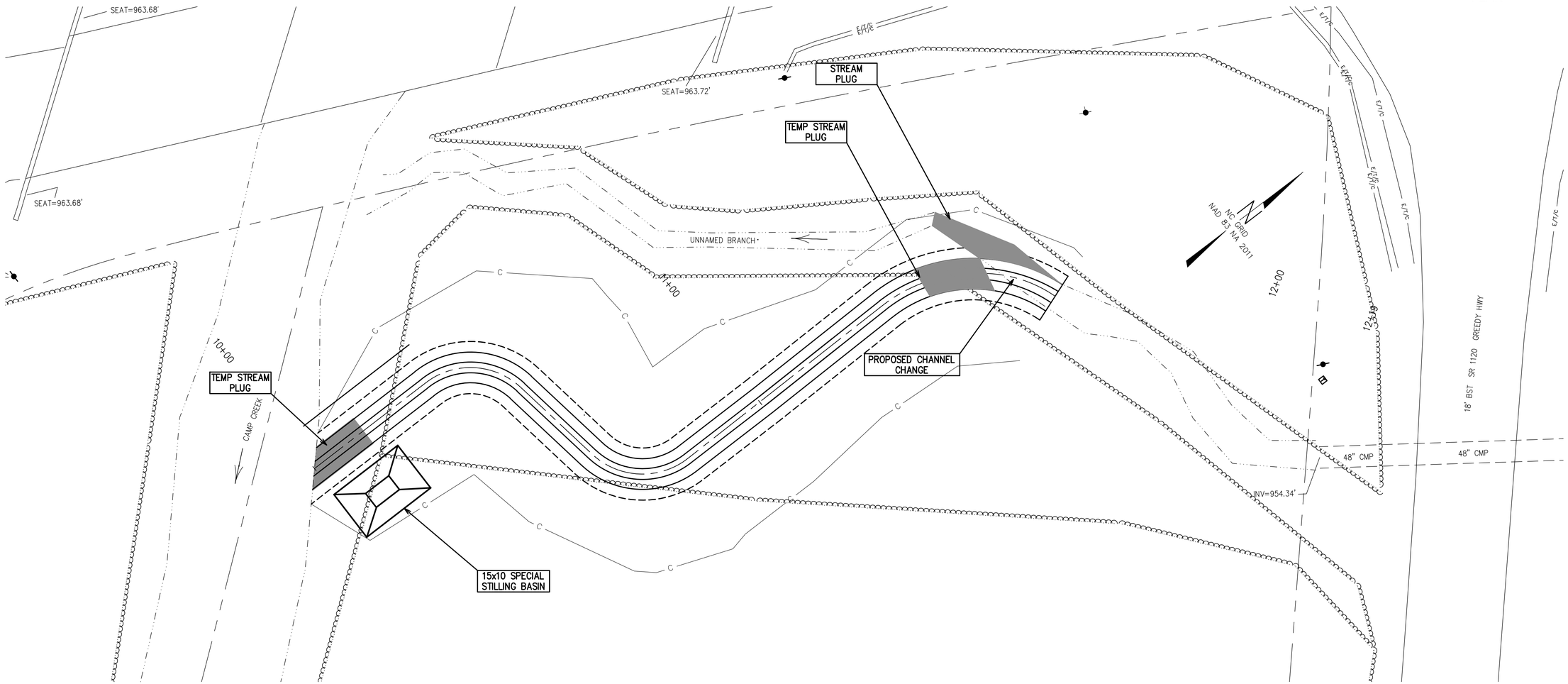

REVISIONS

SYSTEM ID
DESCRIPTION
USERNAME

PROJECT REFERENCE NO.	SHEET NO.
I7BP.14R.68	RE-4
R/W SHEET NO.	
ROADWAY DESIGN ENGINEER	HYDRAULICS ENGINEER

NORTH CAROLINA PROFESSIONAL SEAL 035007 ENGINEER JACOB D. GREER 11-27-2

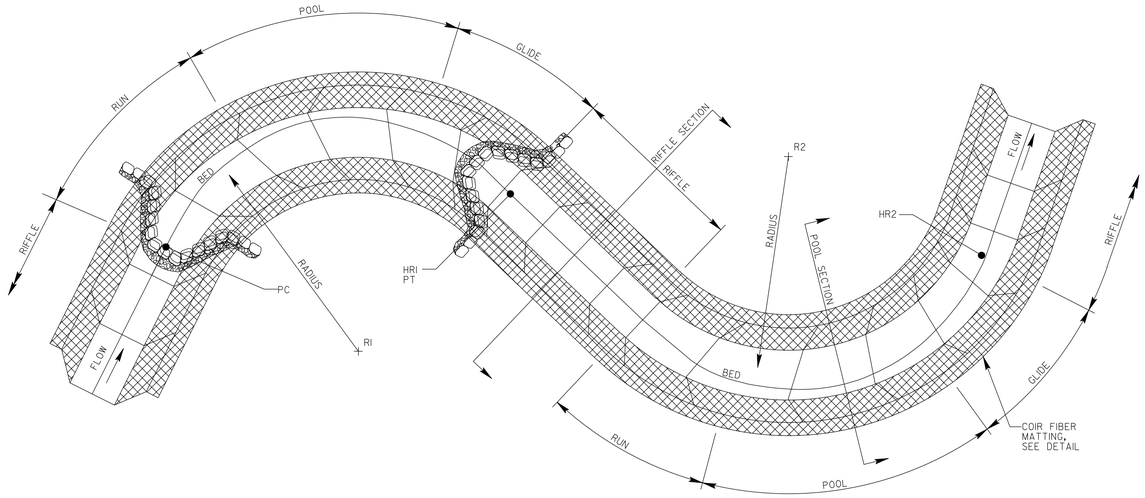

TYPICAL PLAN

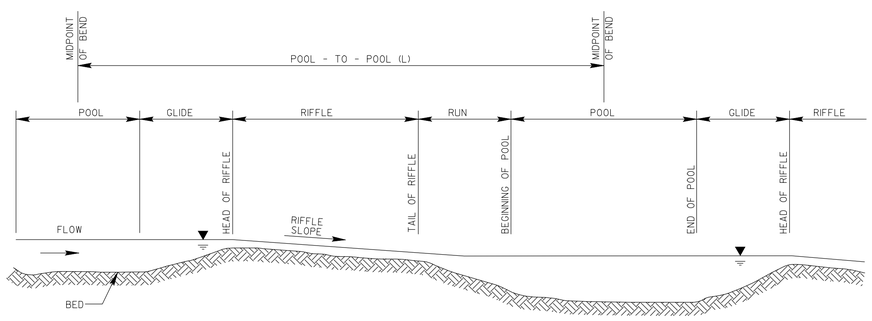

TYPICAL PROFILE

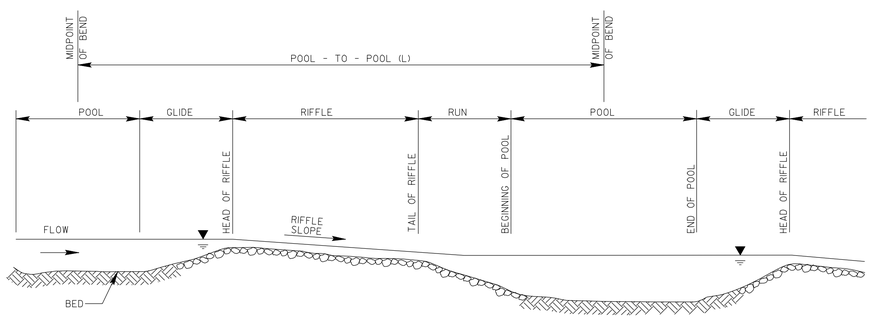

TYPICAL PROFILE FOR ARMORED RIFFLE SECTION

CHANNEL TYPICAL DETAIL

NOT TO SCALE

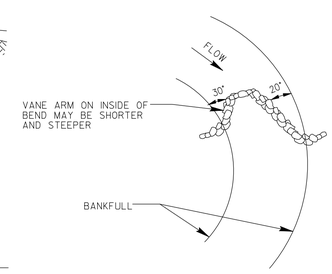

CROSS VANE CONSTRUCTION IN MEANDER-BEND PLAN VIEW

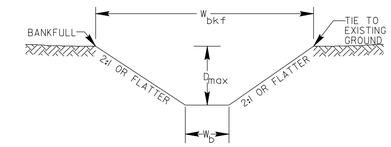

TYPICAL RIFFLE

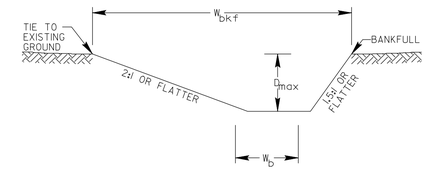

TYPICAL POOL

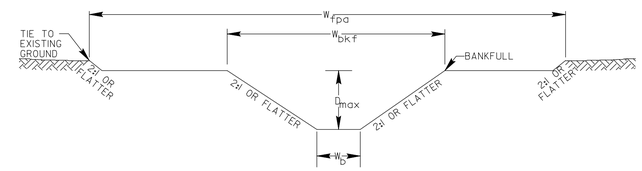

TYPICAL RIFFLE WITH BANKFULL BENCH

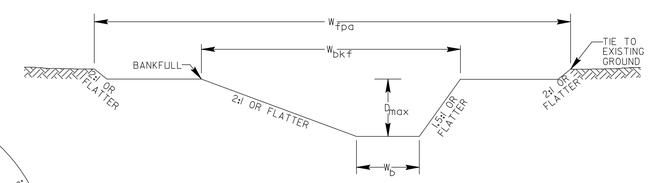

TYPICAL POOL WITH BANKFULL BENCH

W_{bkf} = BANKFULL WIDTH
D_{max} = MAXIMUM DEPTH
W_b = BOTTOM WIDTH
W_{fpa} = FLOOD PRONE AREA WIDTH

CROSS-SECTION DIMENSIONS

REACH	RIFFLE W_{bkf}	RIFFLE D_{max}	RIFFLE W_b	RIFFLE W_{fpa}	POOL W_{bkf}	POOL D_{max}	POOL W_b	POOL W_{fpa}	Width/Depth Ratio
Sta. 10+16 - Sta. 11+78	5.7	0.9	2.1	20	6.7	1.5	2.1	20	9
Sta. ----- - Sta. -----	—	—	—	—	—	—	—	—	—
Sta. ----- - Sta. -----	—	—	—	—	—	—	—	—	—
Sta. ----- - Sta. -----	—	—	—	—	—	—	—	—	—
Sta. ----- - Sta. -----	—	—	—	—	—	—	—	—	—
Sta. ----- - Sta. -----	—	—	—	—	—	—	—	—	—
Sta. ----- - Sta. -----	—	—	—	—	—	—	—	—	—
Sta. ----- - Sta. -----	—	—	—	—	—	—	—	—	—

NOTES:

1. THE COORDINATES FOR EACH CENTER OF RADIUS (EX. 'RI','R2') AND EACH HEAD OF RIFFLE (EX. 'HRI', 'HR2') ARE INDICATED ON THE PLAN SHEETS.

REVISIONS

8/17/99

$$$$SYSTIME$$$$
$$$$USERNAME$$$$

8/17/99

REVISIONS

PROJECT REFERENCE NO.	SHEET NO.
17BP.14.R.68	RE-5
R/W SHEET NO.	
ROADWAY DESIGN ENGINEER	HYDRAULICS ENGINEER

NORTH CAROLINA PROFESSIONAL SEAL 035097 ENGINEER JACOB D. GRIEB 11-27-21

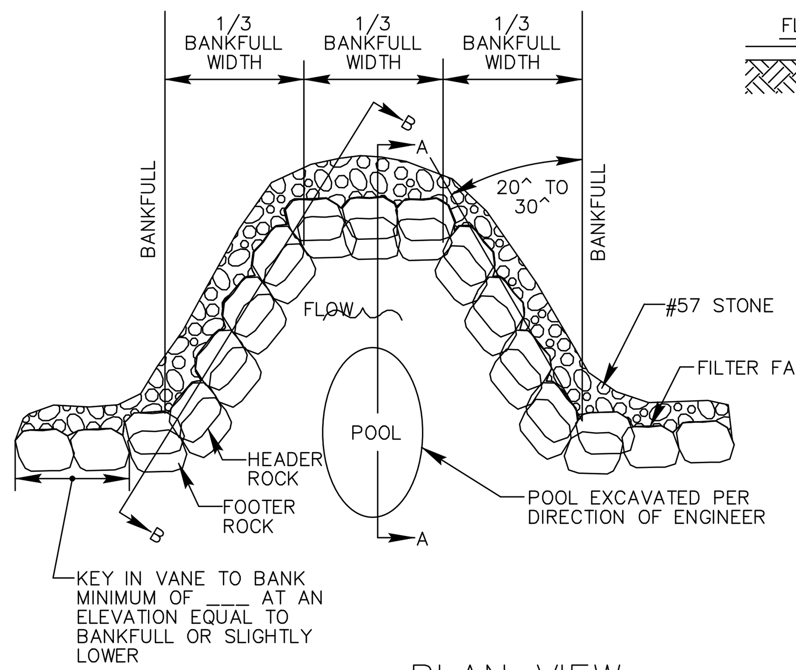

PLAN VIEW

	BOULDER DIMENSIONS (FT)(M)		
STATION	HEIGHT	LENGTH	WIDTH
___	___	___	___
___	___	___	___
___	___	___	___
___	___	___	___
___	___	___	___
___	___	___	___

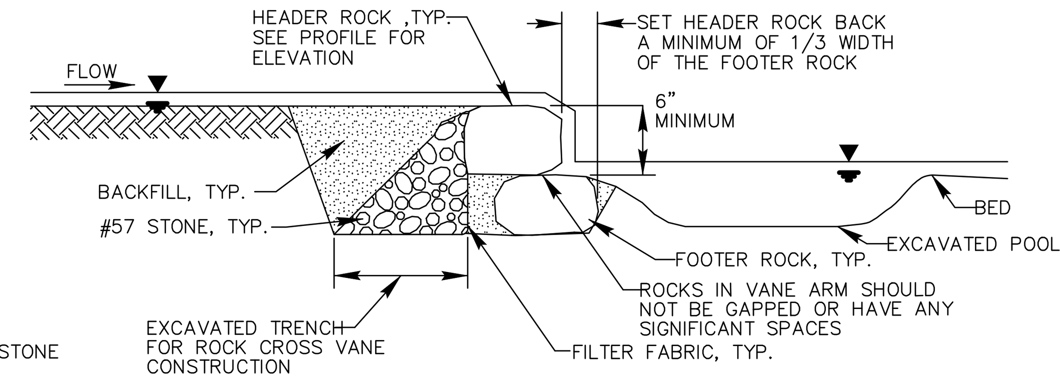

SECTION A-A

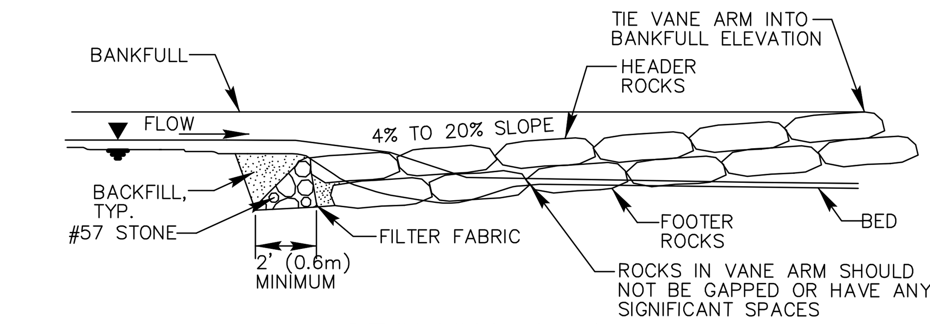

SECTION B-B

NOTES:
1. DEEPEST PART OF POOL TO BE IN LINE WITH WHERE VANE ARM TIES INTO BANKFULL.
2. DO NOT EXCAVATE POOL TOO CLOSE TO FOOTER BOULDERS.
3. CLASS "A" STONE CAN BE USED TO REDUCE VOIDS BETWEEN HEADERS AND FOOTERS.
4. COMPACT BANKFULL TO EXTENT POSSIBLE OR AT THE DIRECTION OF THE ENGINEER.
5. POOL DEPTH SHOULD BE 2 TO 3 TIMES BANKFULL DEPTH.

ROCK CROSS VANE DETAIL

NOT TO SCALE

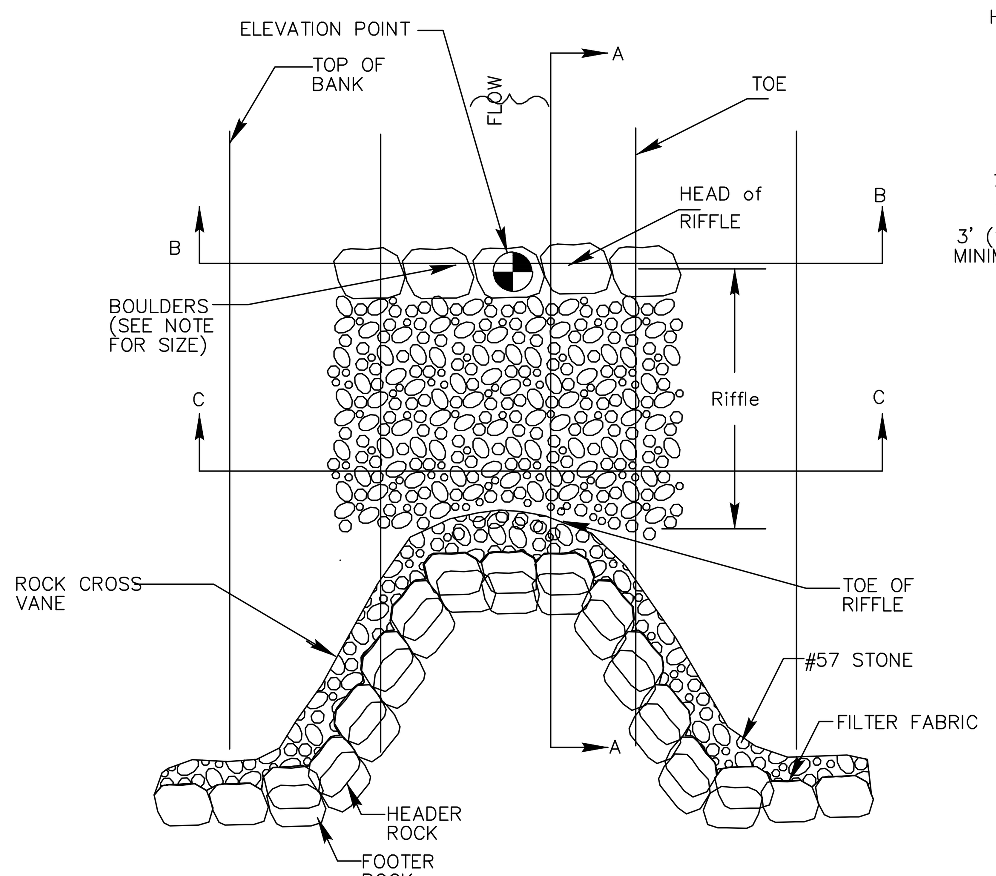

PLAN VIEW

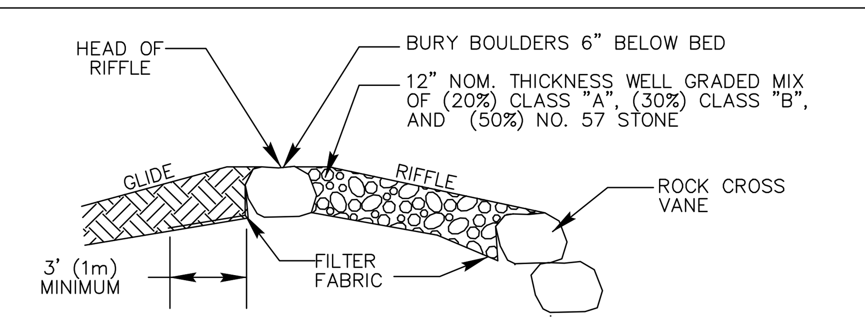

SECTION A-A

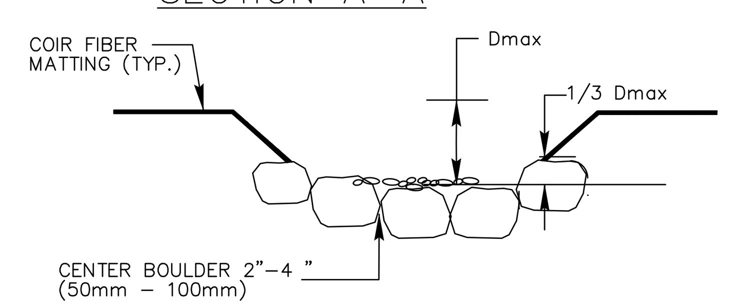

SECTION B-B

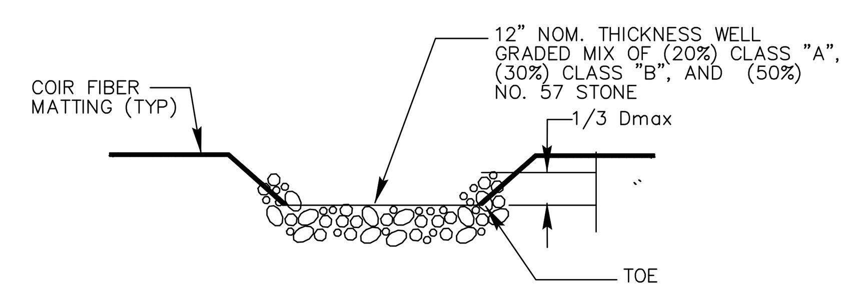

SECTION C-C

NOTE:
1. BOULDERS SHOULD BE NATIVE STONES OR SHOT ROCK, ANGULAR AND OBLONG, WITH AN AXIS APPROXIMATELY 3' L x 2.5' W x 2' D

REACH	___
Wbkf (ft) (m)	6
Dmax (ft) (m)	1

CONSTRUCTED RIFFLE DETAIL

NOT TO SCALE

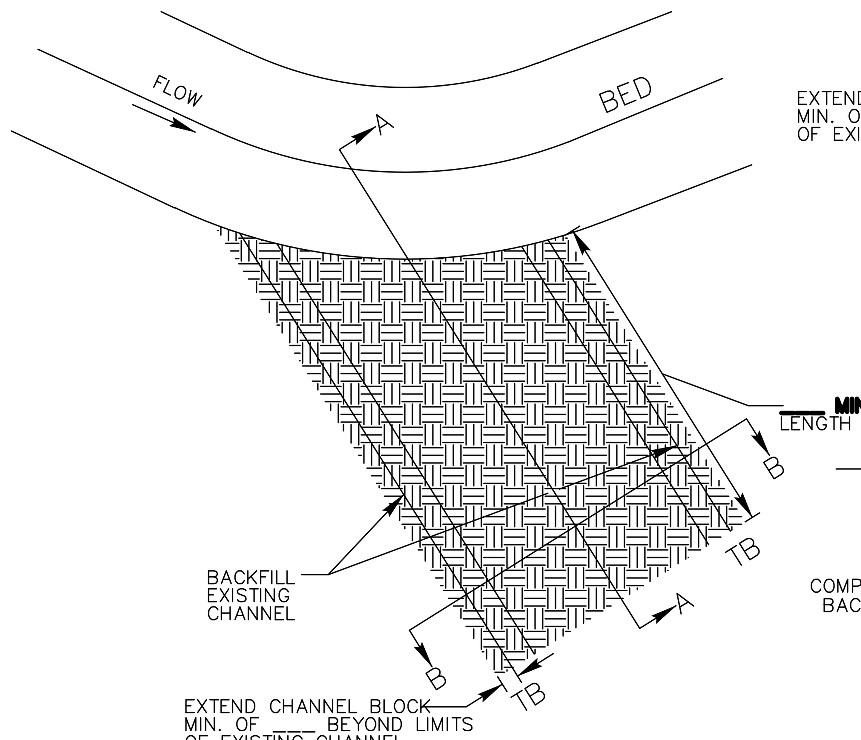

PLAN VIEW

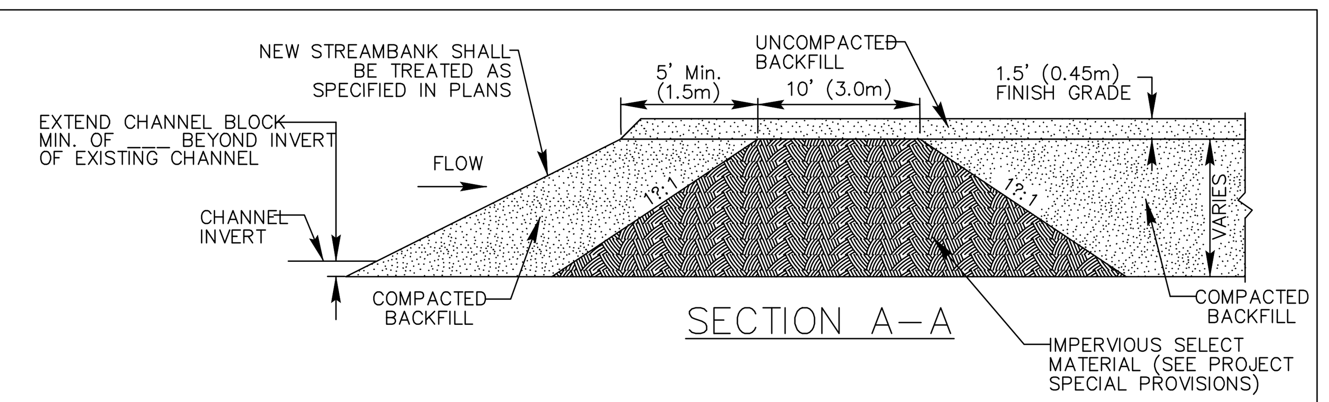

SECTION A-A

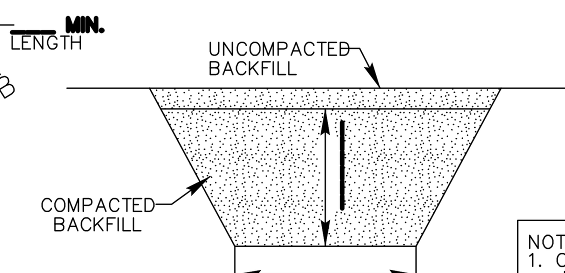

SECTION B-B

STREAM PLUG

NOT TO SCALE

NOTES:
1. CHANNEL BLOCK SHALL BE INSTALLED IN ACCORDANCE WITH THE PROJECT SPECIFICATIONS.
2. BLOCK SHOULD BE INSTALLED AT THE INTERFACE BETWEEN EXISTING CHANNEL AND PROPOSED CHANNEL.
3. BOTTOM OF BLOCK SHOULD BE A MINIMUM OF 1' BELOW THE INVERT OF THE EXISTING CHANNEL.
4. BLOCK SHOULD EXTEND A MINIMUM OF 10' BEYOND THE LIMITS OF THE EXISTING STREAM CHANNEL.
5. INSTALL EROSION CONTROL MATTING AND SEED IN ACCORDANCE WITH THE PROJECT SPECIFICATIONS IMMEDIATELY AFTER GRADING.
6. COMPACT BACKFILL TO EXTENT POSSIBLE OR AT THE DIRECTION OF THE ENGINEER.

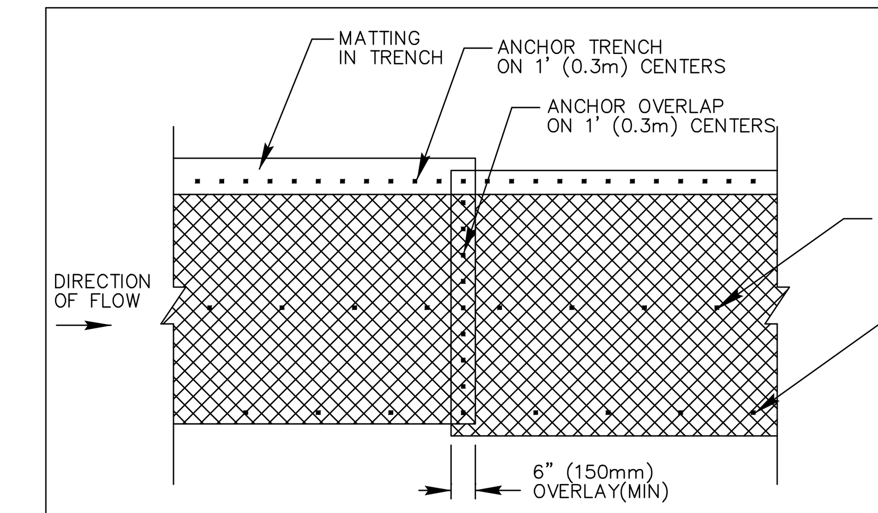

PLAN VIEW

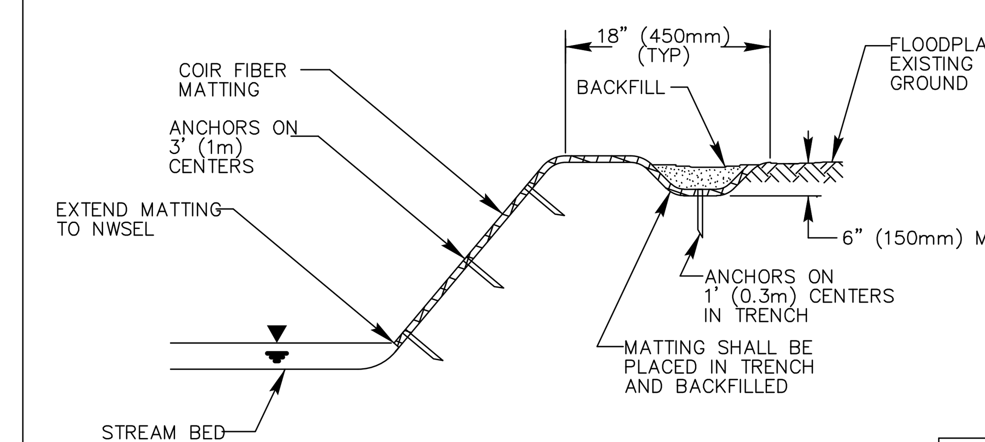

TYPICAL CROSS SECTION

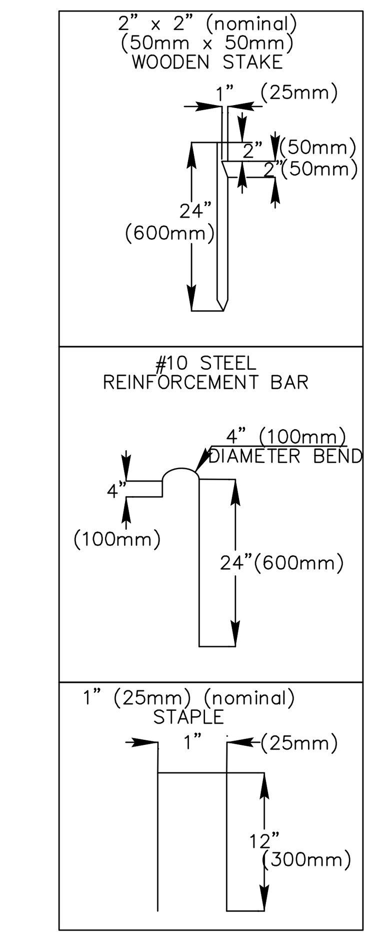

ANCHOR OPTIONS

NOTES:
1. IN AREAS TO BE MATTED, ALL SEEDING, SOIL AMENDMENTS, AND SOIL PREPARATION MUST BE COMPLETED IN ACCORDANCE WITH THE PROJECT SPECIFICATIONS PRIOR TO PLACEMENT OF COIR FIBER MATTING.
2. REBAR OR STAPLES MAY BE USED IN PLACE OF WOODEN STAKES AS DIRECTED BY THE ENGINEER.

COIR FIBER MATTING DETAIL

NOT TO SCALE

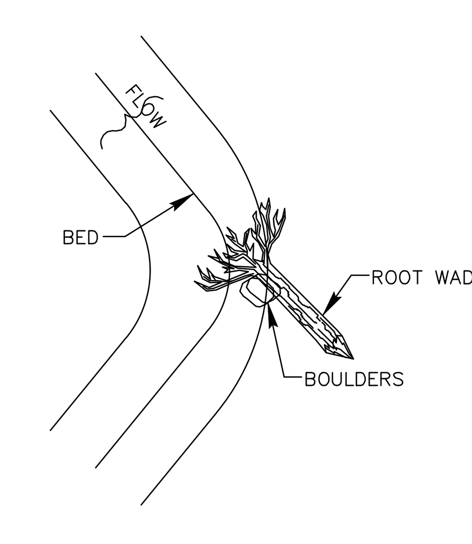

PLAN VIEW
DRIVE POINT METHOD

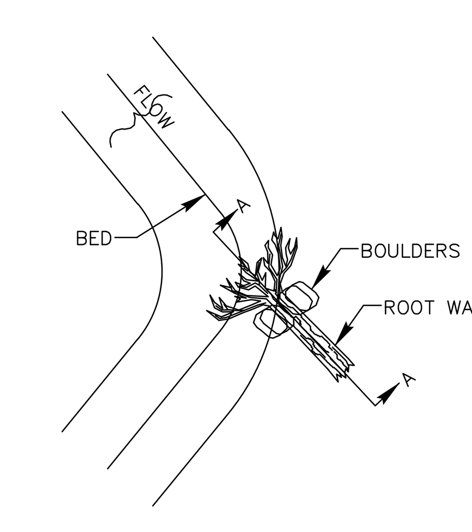

PLAN VIEW
TRENCHING METHOD

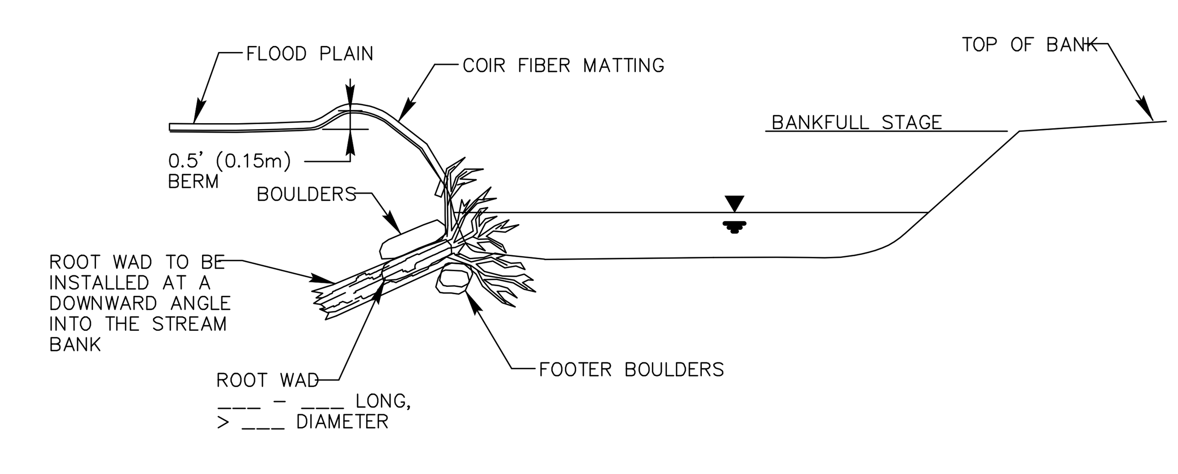

SECTION A-A

NOTES:

ORIENT ROOT WADS SO THAT THE STREAM FLOW MEETS THE ROOT WAD STRAIGHT ON, DEFLECTING THE WATER AWAY FROM THE BANK.

METHODS OF INSTALLATION:

DRIVE POINT METHOD:

SHARPEN THE END OF THE LOG BEFORE "DRIVING" AT A DOWNWARD ANGLE INTO THE BANK. BOULDER SHOULD BE PLACED ON EACH SIDE OF THE ROOT WAD TO PIN IT IN PLACE. THE BOULDERS SHALL BE APPROXIMATELY 3' X 2.5' X 2'. ONE-THIRD OF THE ROOT WAD SHOULD REMAIN BELOW NORMAL BASE FLOW CONDITIONS.

TRENCHING METHOD:

IF THE ROOT WAD CANNOT BE DRIVEN INTO THE BANK OR THE BANK NEEDS TO BE RECONSTRUCTED, THE TRENCHING METHOD SHOULD BE USED. THIS METHOD REQUIRES THAT A TRENCH BE EXCAVATED FOR THE LOG PORTION OF THE ROOT WAD. IN THIS CASE, FOOTER BOUDERS SHOULD BE INSTALLED UNDERNEATH THE ROOT WAD IN A TRENCH EXCAVATED PARALLEL TO THE BANK AND WELL BELOW THE STREAM BED. BOULDERS SHOULD BE PLACED ON EACH SIDE OF THE ROOTWAD TO PIN IT IN PLACE. THE BOULDERS SHOULD BE APPROXIMATELY 3' X 2.5' X 2'. ONE-THIRD OF THE ROOT WAD SHOULD REMAIN BELOW NORMAL BASE FLOW CONDITIONS.

ROOT WAD DETAIL

NOT TO SCALE

$$$$$$SYSTIME$$$$$
$$$$$$$$$$$$DGN$$$$$$$$$$$$$$$$$
$$$$USERNAME$$$$$

PROJECT REFERENCE NO.	SHEET NO.
17BP.14.R.68	RF-1
R/W SHEET NO.	
ROADWAY DESIGN ENGINEER	HYDRAULICS ENGINEER

NORTH CAROLINA PROFESSIONAL SEAL 035087 ENGINEER JACOB D. GREEN 11-27-2

PLANTING DETAILS

LIVE STAKES PLANTING DETAIL

LIVE STAKE

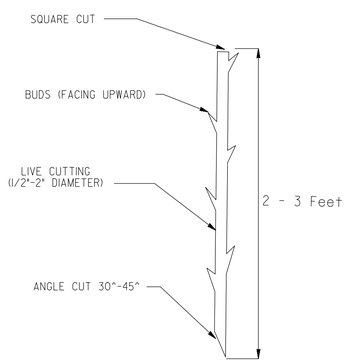

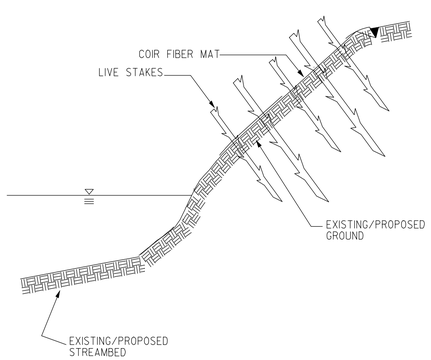

BANK STABILIZATION WITH LIVE STAKES

NOTE:
LIVE STAKES SHALL BE SPACED APPROXIMATELY 4 FEET ON CENTER
LIVE STAKES SHALL BE DRIVEN UNTIL APPROXIMATELY 3/4 OF LIVE STAKE IS WITHIN GROUND

BAREROOT PLANTING DETAIL DIBBLE PLANTING METHOD USING THE KBC PLANTING BAR

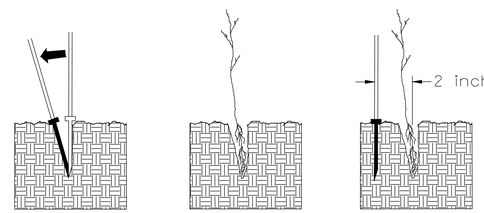

1. Insert planting bar as shown and pull handle toward planter.
2. Remove planting bar and place seedling at correct depth.
3. Insert planting bar 2 inches toward planter from seedling.

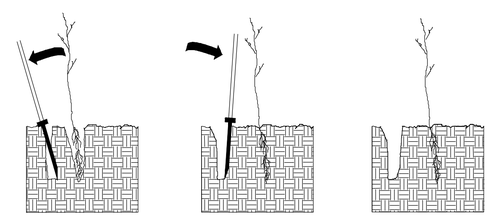

4. Pull handle of bar toward planter, firming soil at bottom.
5. Push handle forward firming soil at top.
6. Leave compaction hole open. Water thoroughly.

PLANTING NOTES:

PLANTING BAG
During planting, seedlings shall be kept in a moist canvas bag or similar container to prevent the root systems from drying.

KBC PLANTING BAR
Planting bar shall have a blade with a triangular cross section, and shall be 12 inches long, 4 inches wide and 1 inch thick at center.

ROOT PRUNING
All seedlings shall be root pruned, if necessary, so that no roots extend more than 10 inches below the root collar.

☐ TYPE 1 STREAMBANK REFORESTATION SHALL BE PLANTED 3 FT. TO 5 FT. ON CENTER, RANDOM SPACING, AVERAGING 4 FT. ON CENTER, APPROXIMATELY 2724 PLANTS PER ACRE.

☐ TYPE 2 STREAMBANK REFORESTATION SHALL BE PLANTED 6 FT. TO 10 FT. ON CENTER, RANDOM SPACING, AVERAGING 8 FT. ON CENTER, APPROXIMATELY 680 PLANTS PER ACRE.

☐ NOTE: TYPE 1 AND TYPE 2 STREAMBANK REFORESTATION SHALL BE PAID FOR AS "STREAMBANK REFORESTATION"

STREAMBANK REFORESTATION TYPICAL

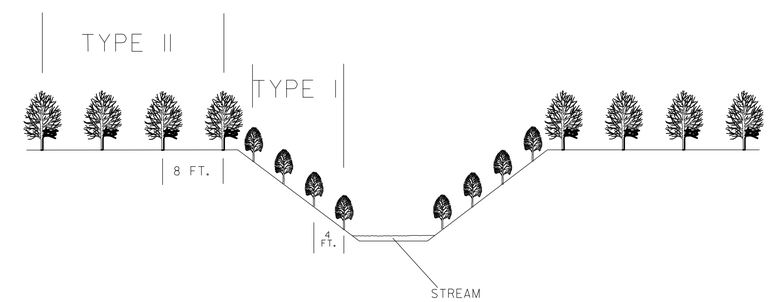

STREAMBANK REFORESTATION

MIXTURE, TYPE, SIZE, AND FURNISH SHALL CONFORM TO THE FOLLOWING:

TYPE 1		
50% SALIX NIGRA	BLACK WILLOW	2 ft - 3 ft LIVE STAKES
50% CORNUS AMOMUM	SILKY DOGWOOD	2 ft - 3 ft LIVE STAKES
TYPE 2		
25% LIRIODENDRON TULIPIFERA	TULIP POPLAR	12 in - 18 in BR
25% PLATANUS OCCIDENTALIS	SYCAMORE	12 in - 18 in BR
25% PRUNUS SEROTINA	BLACK CHERRY	12 in - 18 in BR
25% BETULA NIGRA	RIVER BIRCH	12 in - 18 in BR

☐ SEE PLAN SHEETS FOR AREAS TO BE PLANTED

STREAMBANK REFORESTATION DETAIL SHEET 1 OF 2

N.C.D.O.T. - ROADSIDE ENVIRONMENTAL UNIT

8/17/99

REVISIONS

$$$$USERNAME$$$$ $$$$SYSTIME$$$$

PROJECT REFERENCE NO. 17BP.14.R.68
SHEET NO. RF-1
R/W SHEET NO.
ROADWAY DESIGN ENGINEER
HYDRAULICS ENGINEER

NORTH CAROLINA PROFESSIONAL ENGINEER SEAL 035097 JACOB D. GRIEB 11-27-21

8/17/99

REVISIONS

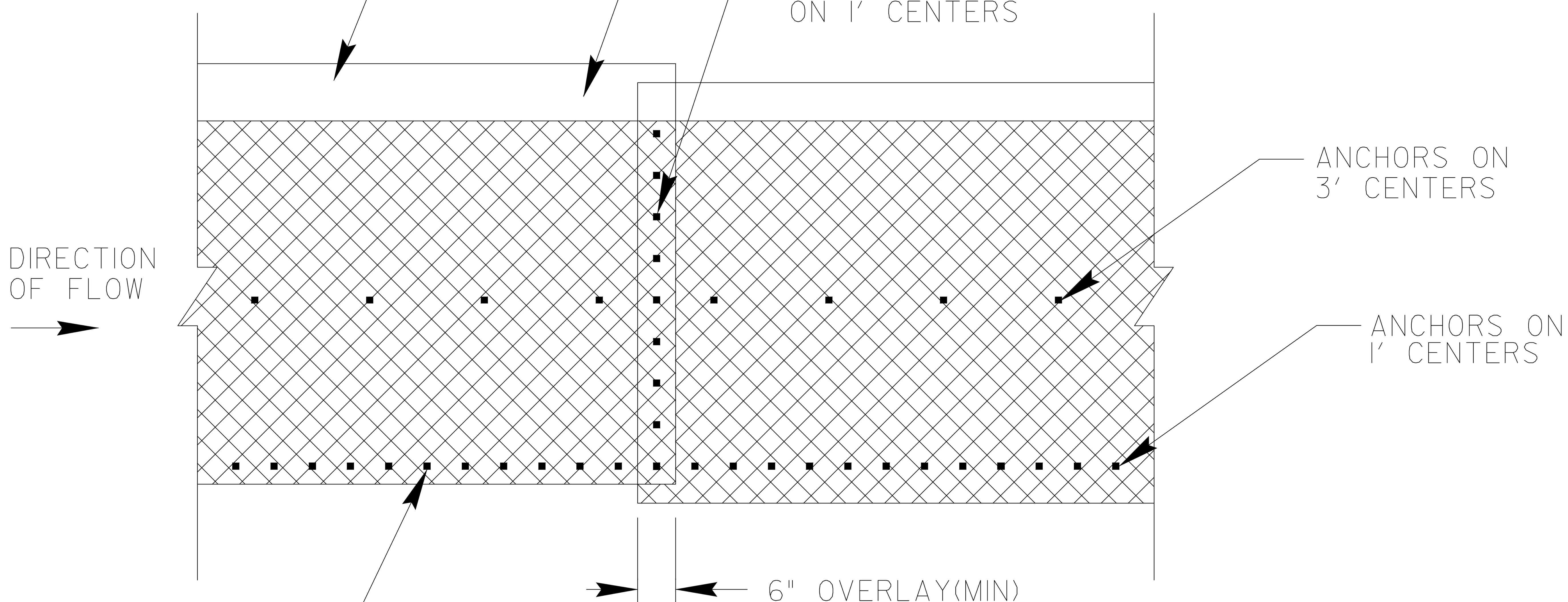

PLAN VIEW

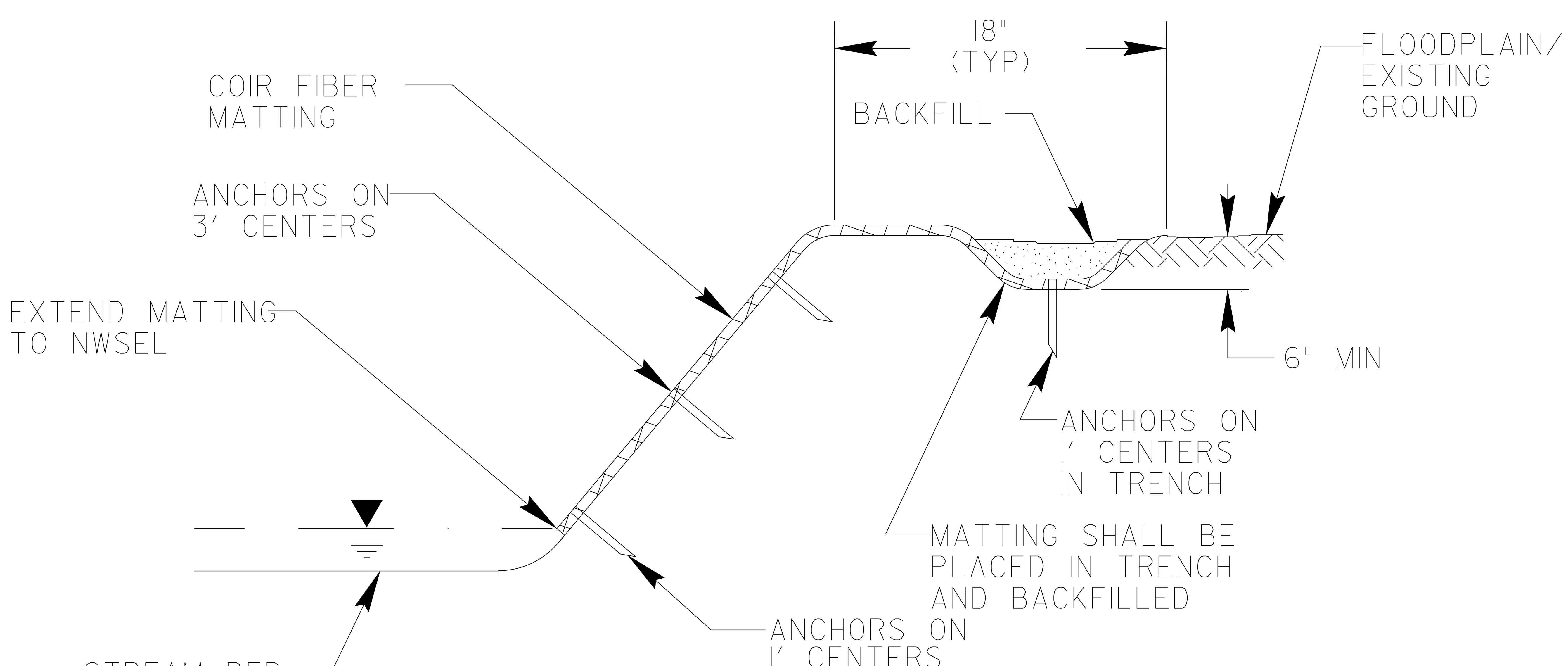

TYPICAL CROSS SECTION

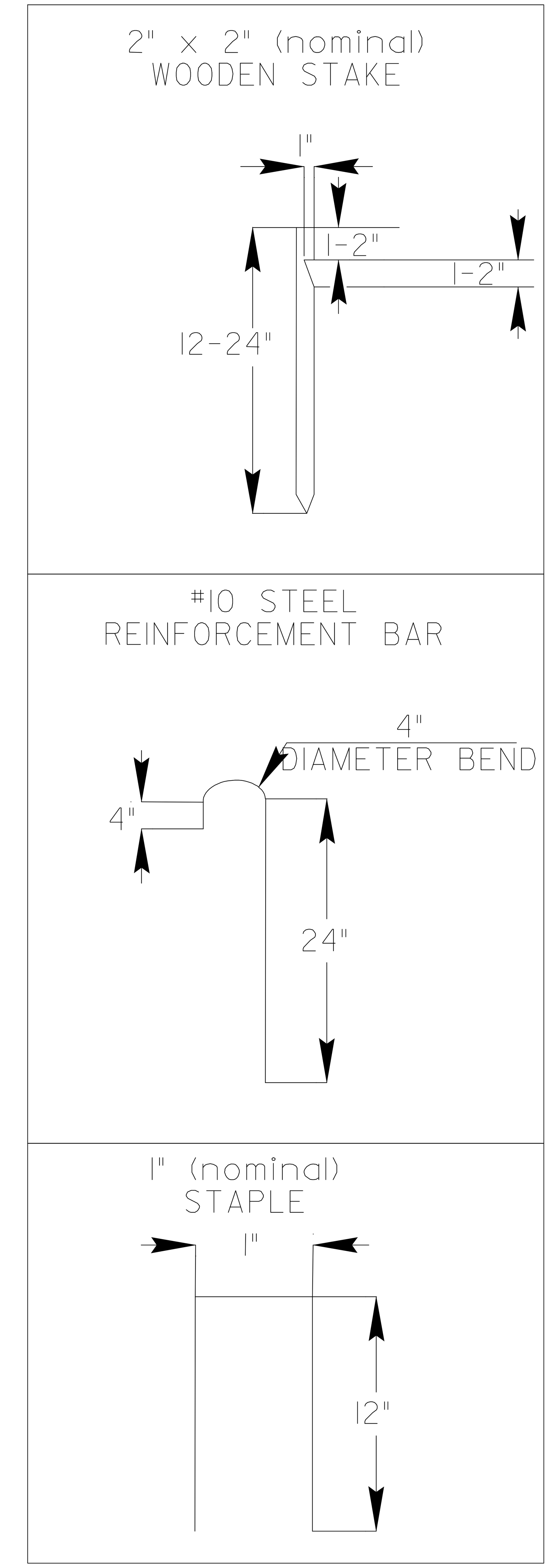

ANCHOR OPTIONS

COIR FIBER MATTING DETAIL

NOT TO SCALE

STREAMBANK REFORESTATION DETAIL SHEET 2 OF 2

N.C.D.O.T. - ROADSIDE ENVIRONMENTAL UNIT

$$$$$$SYSTIME$$$$$
$$$$$$$$$$$$DGN$$$$$$$$$$$$$$$$$

PROJECT REFERENCE NO.	SHEET NO.
17BP.12.R.62	U0-1

UTILITIES BY OTHERS

NOTE:
ALL PROPOSED UTILITY WORK SHOWN ON THIS SHEET WILL BE DONE BY OTHERS

Cardno
Shaping the Future
CHARLOTTE
9800 SOUTHERN PINE BLVD, STE I CHARLOTTE, NC 28273
TEL: (704) 927-9700 FAX: (704) 529-3272
www.cardno.com

Mattern & Craig
ENGINEERS-SURVEYORS
12 BROAD STREET
ASHEVILLE, NORTH CAROLINA 28801
(828) 254-2201
FAX (828) 254-4562
NC LIC. NO. C-1154

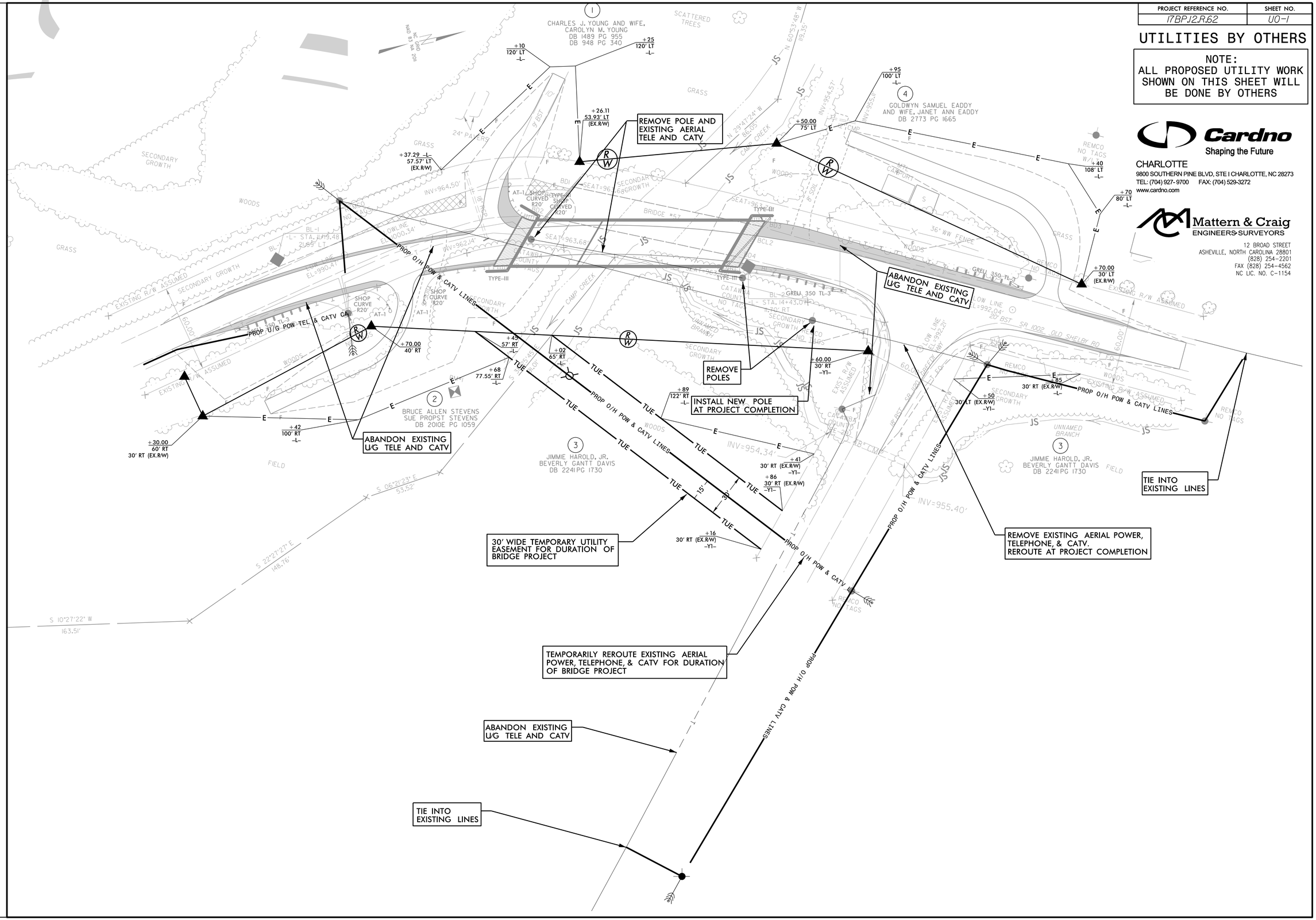

COMPUTED BY: VHW	DATE: 4/17/18
CHECKED BY: ACC	DATE: 4/17/18

PROJECT REFERENCE NO.	SHEET NO.
17BP.12.R.62	X-0

DIVISION OF HIGHWAYS
STATE OF NORTH CAROLINA

CROSS SECTION SUMMARY

IN CUBIC YARDS

CROSS SECTION SHEET INDEX

CHAIN	BEGIN STATION	END STATION	SHEET NO.
-L-	10+30	17+50	X-1 to X-4
-Y1-	10+10.25	11+20	X-5
-DR1-	10+10	11+55	X-6 to X-7
-DR2-	10+00	11+20	X-8
-DR3-	10+10	12+15	X-9 to X-10

-L- LOCATION	UNCLASSIFIED EXCAVATION	EMBT
10+30	0	0
10+50	0	46
11+00	0	146
11+50	0	161
12+00	0	179
12+50	0	561
12+85.33 (BEGIN BRIDGE)	0	674
14+31.66 (END BRIDGE)	0	0
14+50	0	660
15+00	0	1182
15+50	0	540
16+00	0	166
16+50	0	100
17+00	1	16
17+50	0	1

-Y1- LOCATION	UNCLASSIFIED EXCAVATION	EMBT
10+10.25	0	0
10+50	0	61
11+00	1	41
11+20	0	1

-DR1- LOCATION	UNCLASSIFIED EXCAVATION	EMBT
10+10	0	0
10+50	0	270
11+00	0	428
11+50	4	90
11+55	1	0

-DR2- LOCATION	UNCLASSIFIED EXCAVATION	EMBT
10+00	0	0
10+50	0	126
11+00	0	197
11+20	0	107

-DR3- LOCATION	UNCLASSIFIED EXCAVATION	EMBT
10+10	0	0
10+50	0	14
11+00	0	129
11+50	0	414
12+00	0	365
12+15	0	43

Approximate quantities only. Unclassified excavation, borrow excavation, fine grading, clearing and grubbing, and removal of existing pavement will be paid for at the contract lump sum price for "grading".

NOTE: EMBANKMENT COLUMN DOES NOT INCLUDE BACKFILL FOR UNDERCUT.

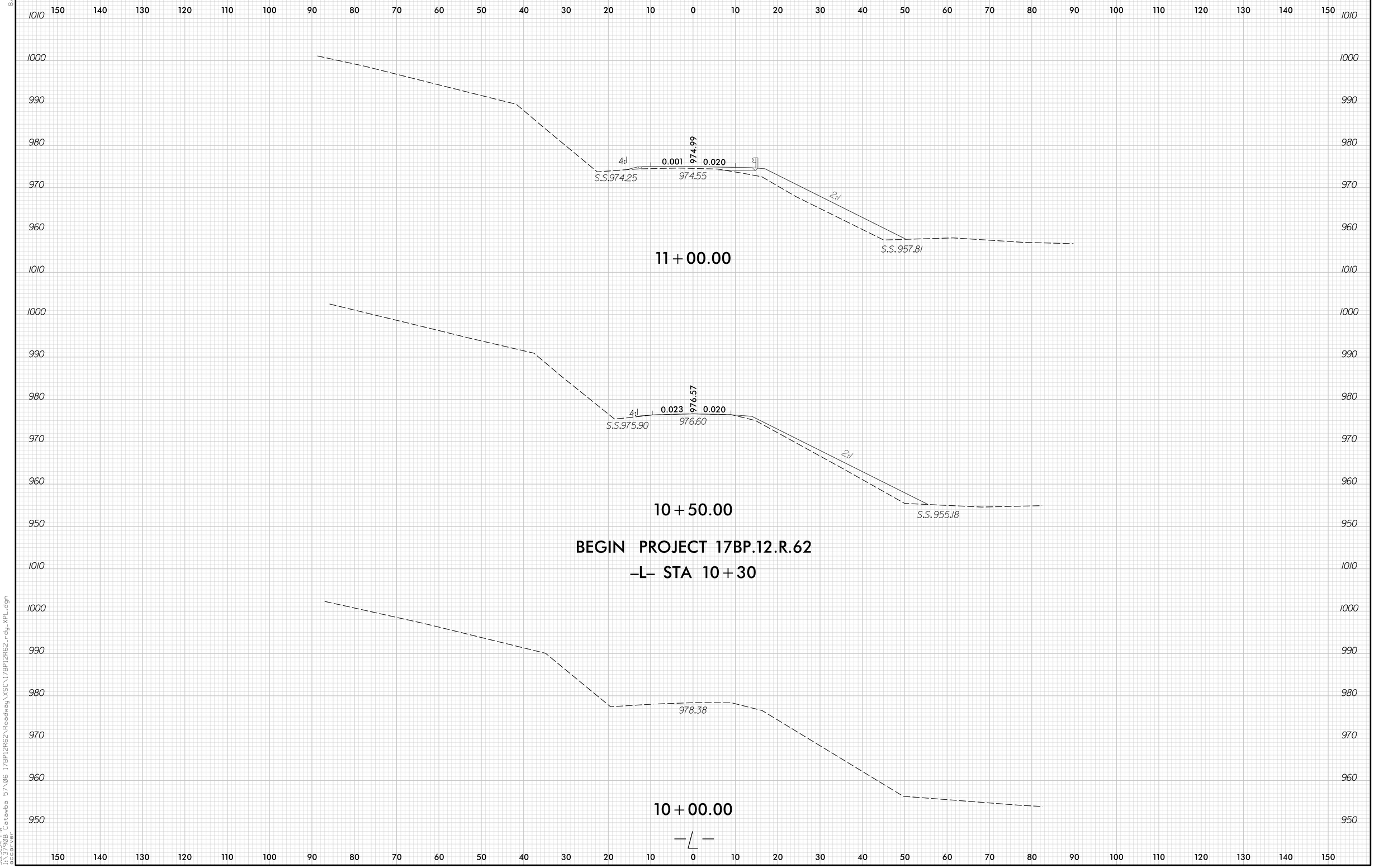

8/23/99

3:25:34 PM
I:\3790B Catawba 57\06 17BP12R62\Roadway\XSC\17BP12R62_rdy_XPL.dgn
accarver

0 5 10	PROJ. REFERENCE NO.	SHEET NO.
	17BP.12.R.62	X-2

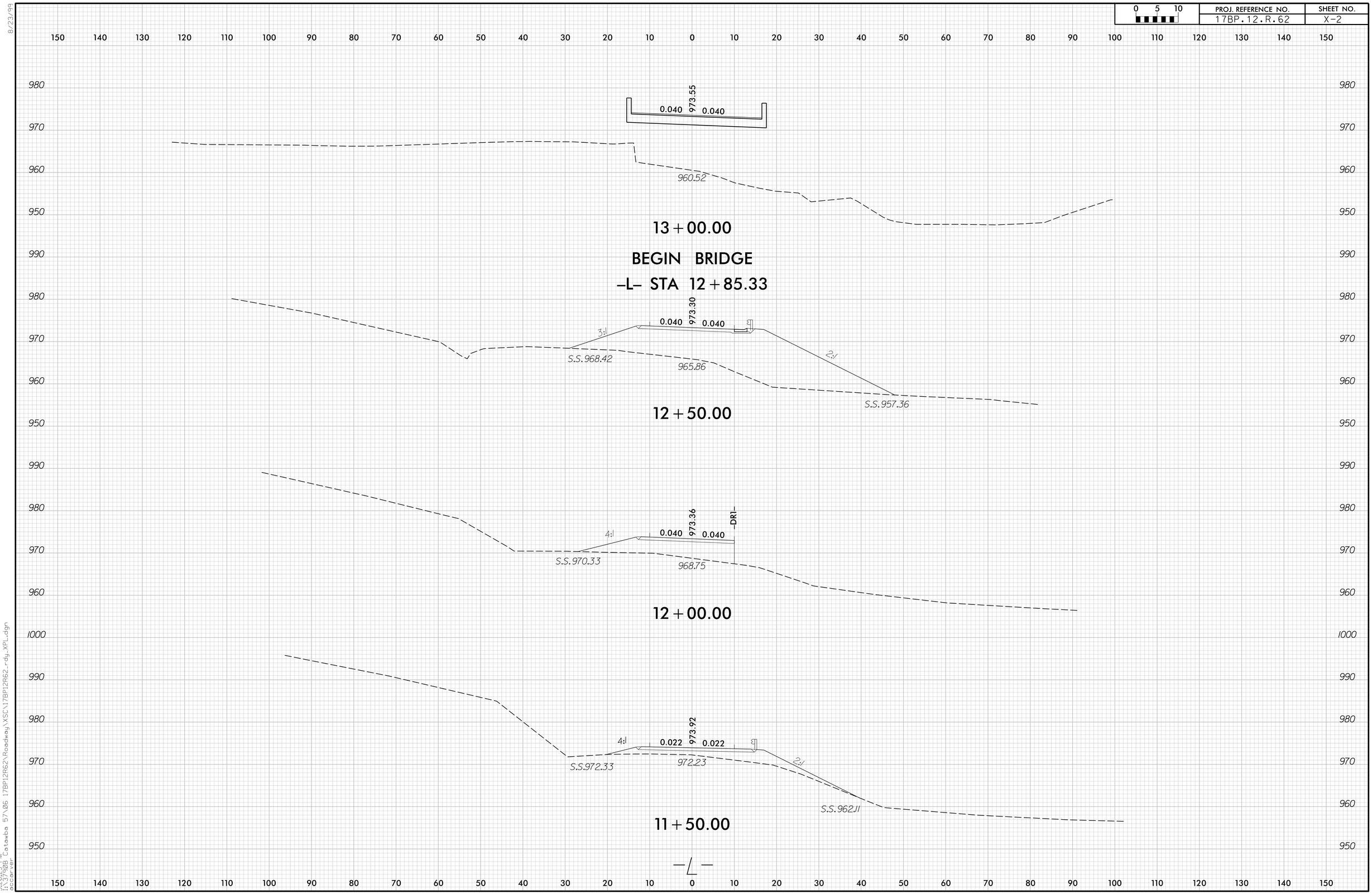

8/23/99

3:26:23 PM
17BP.12.R.62 Catawba 57\06 17BP12R62\Roadway\XSC\17BP12R62_rdy_XPL.dgn
acarver

0 5 10	PROJ. REFERENCE NO.	SHEET NO.
	17BP.12.R.62	X-3

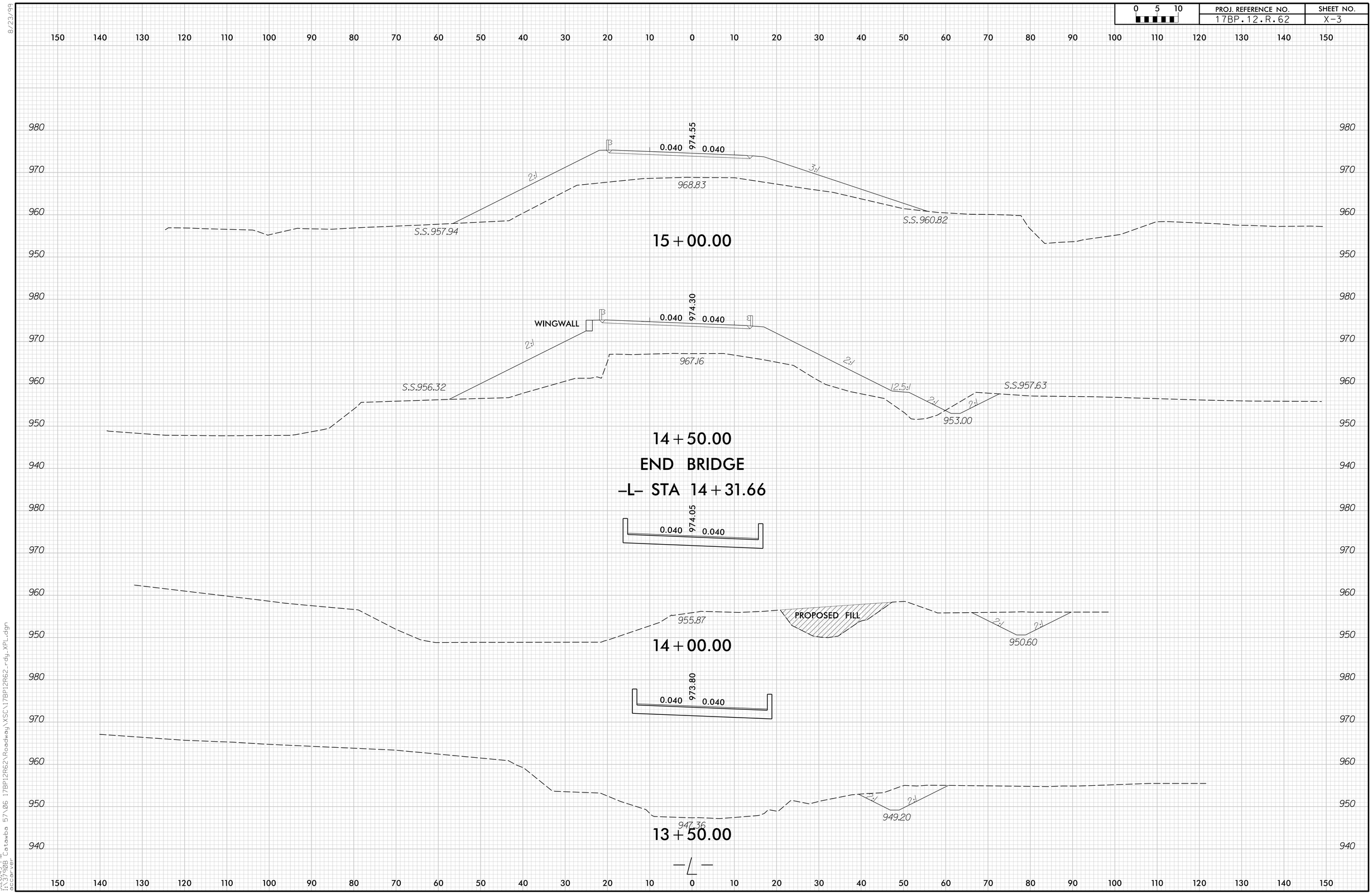

8/23/99

3:26:49 PM
17BP.12.R.62 Catawba 57\06 17BP12R62\Roadway\XSC\17BP12R62_rdy_XPL.dgn
acoover

PROJ. REFERENCE NO.	SHEET NO.
17BP.12.R.62	X-4

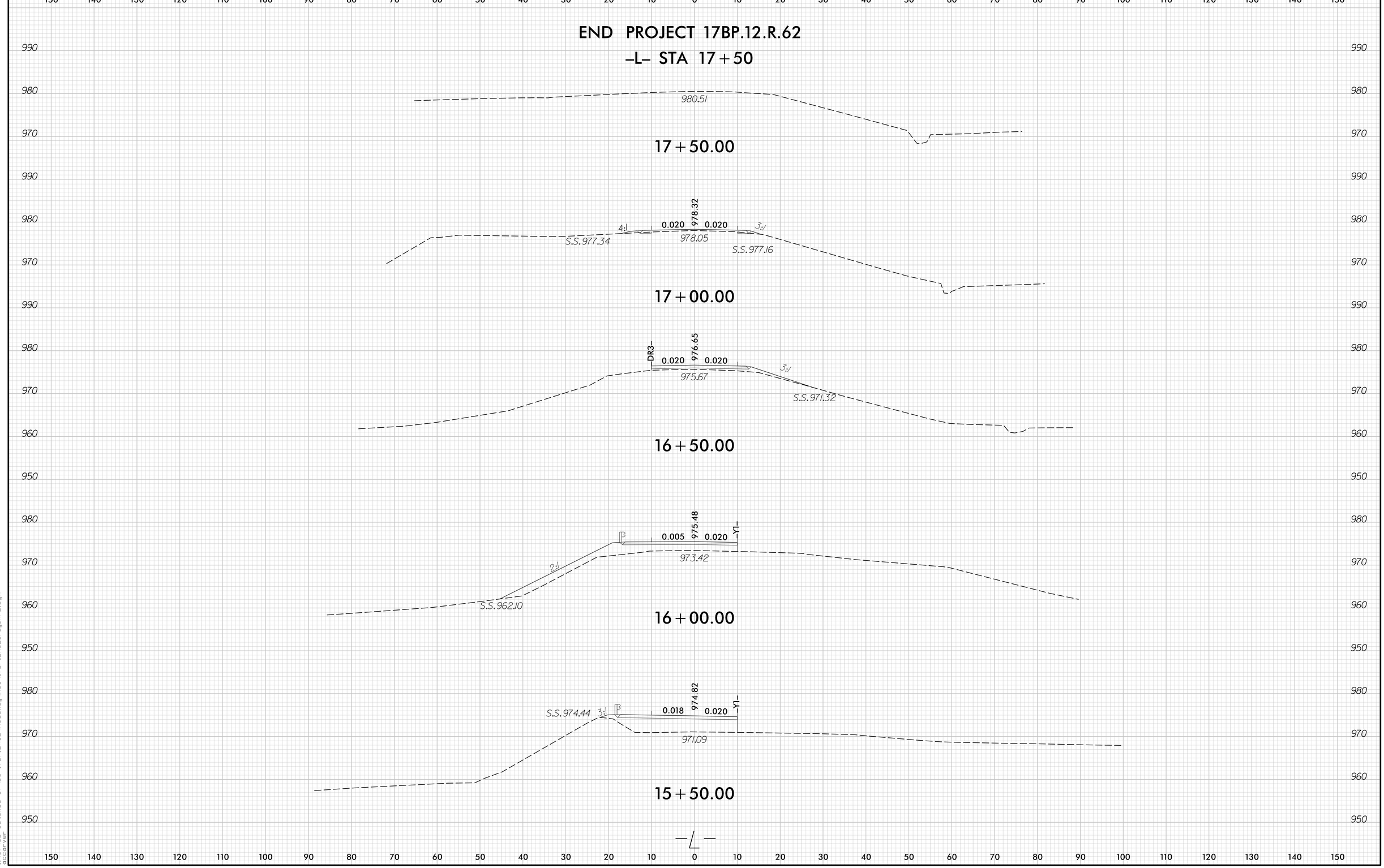

8/23/99

3:27:30 PM
I:\3790B Catawba 57\06 17BP12R62\Roadway\XSC\17BP12R62_rdy_XPL.dgn
accarver

0 5 10	PROJ. REFERENCE NO.	SHEET NO.
	17BP.12.R62	X-5

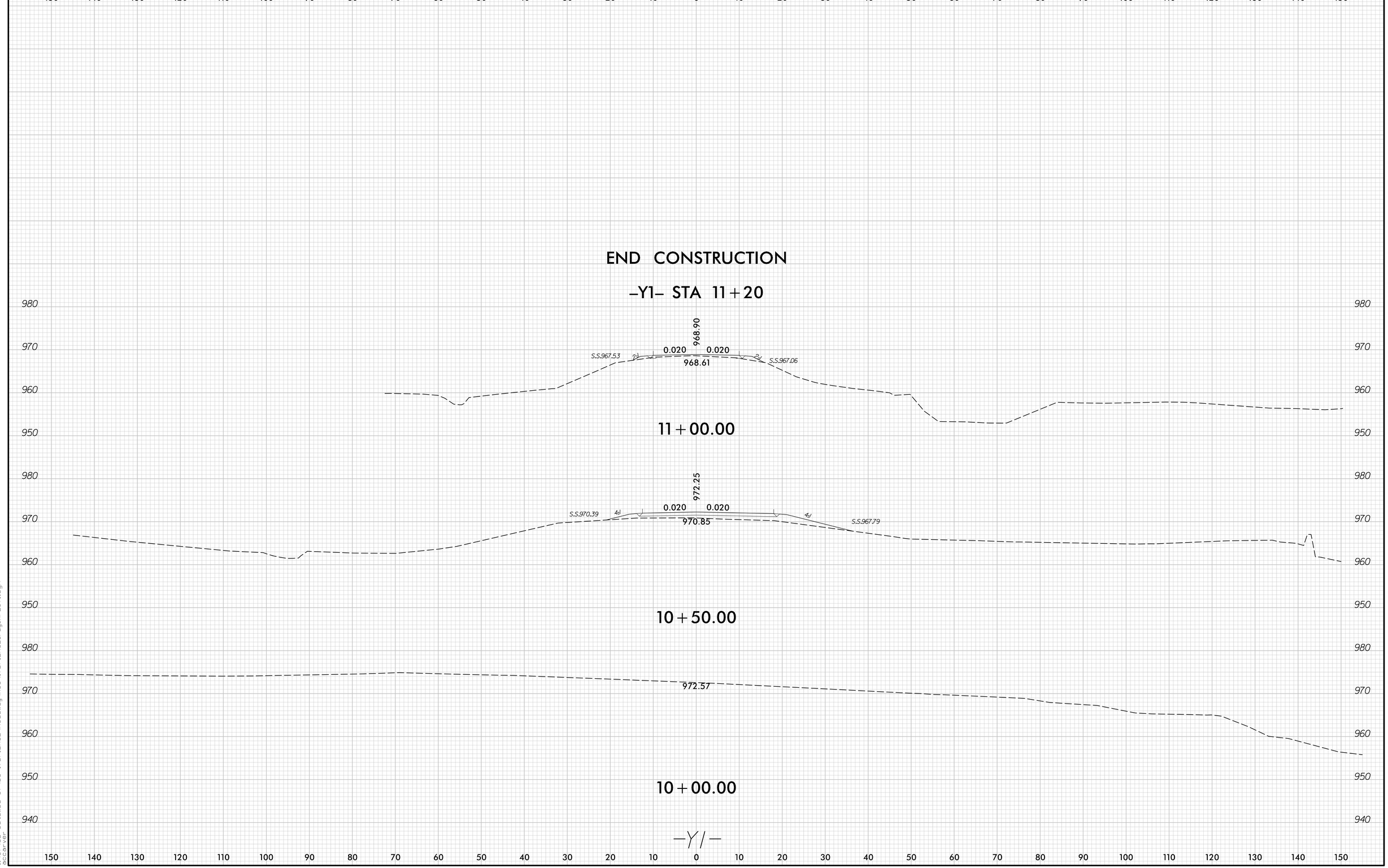

6/23/16

3:28:59 PM
1:37908 Catawba 57\06 17BP12R62\Roadway\XSC\17BP12R62_rdy_XPL_Y1.dgn
accarver

8/23/99

0 2.5 5	PROJ. REFERENCE NO.	SHEET NO.
	17BP.12.R.62	X-6

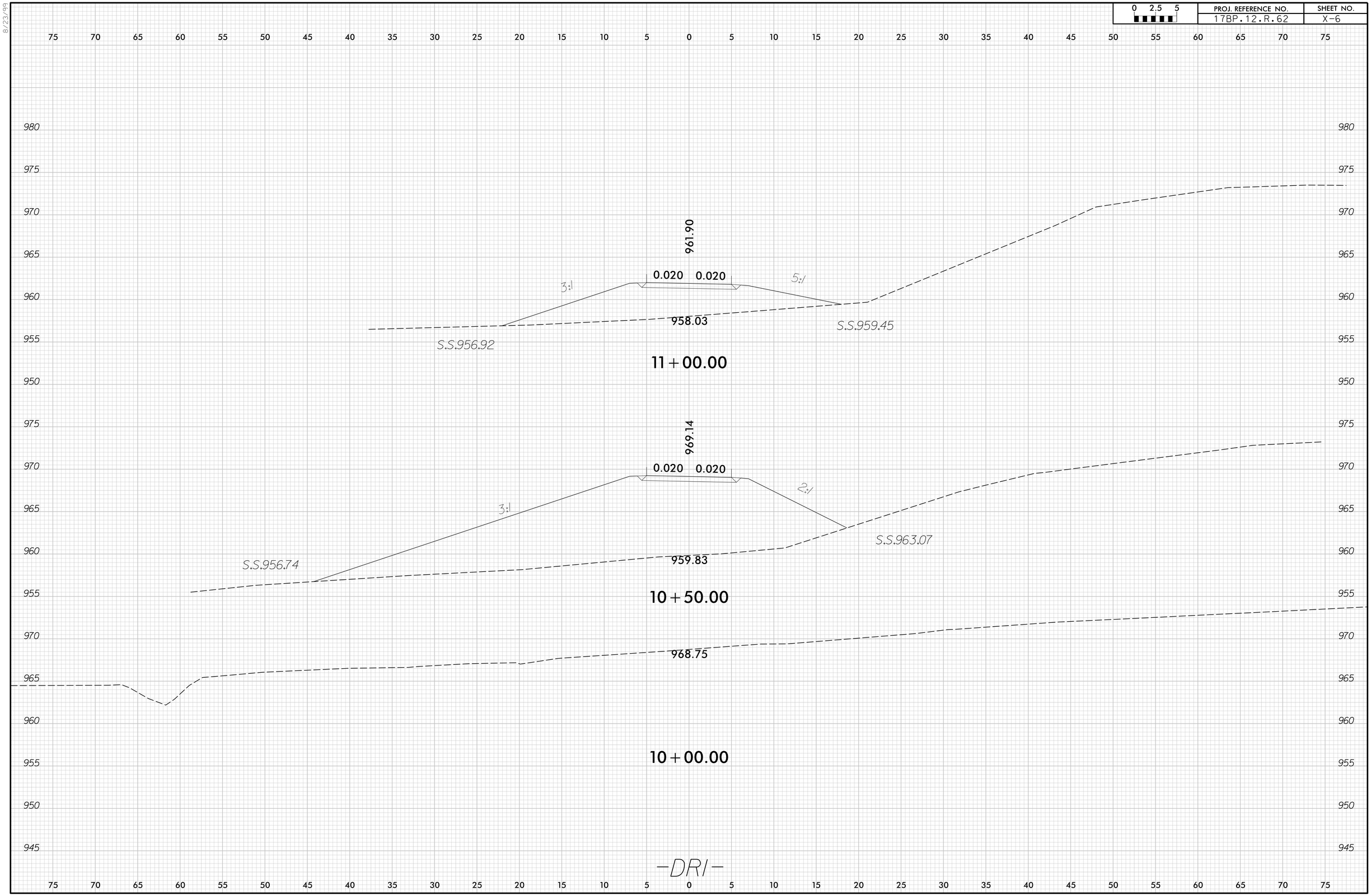

8/23/99

0 2.5 5	PROJ. REFERENCE NO.	SHEET NO.
	17BP.12.R.62	X-7

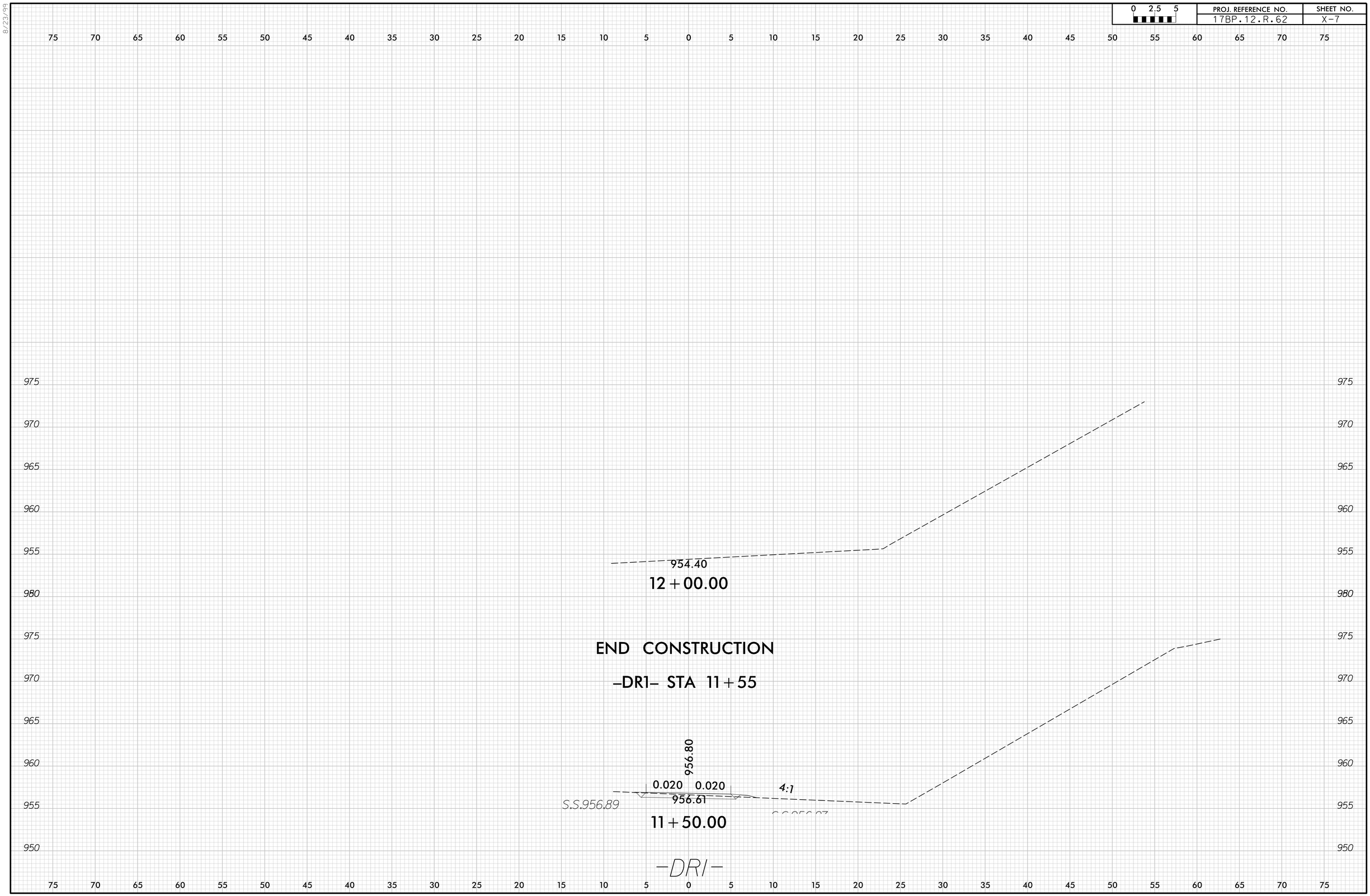

PROJ. REFERENCE NO.	SHEET NO.
17BP.12.R.62	X-8

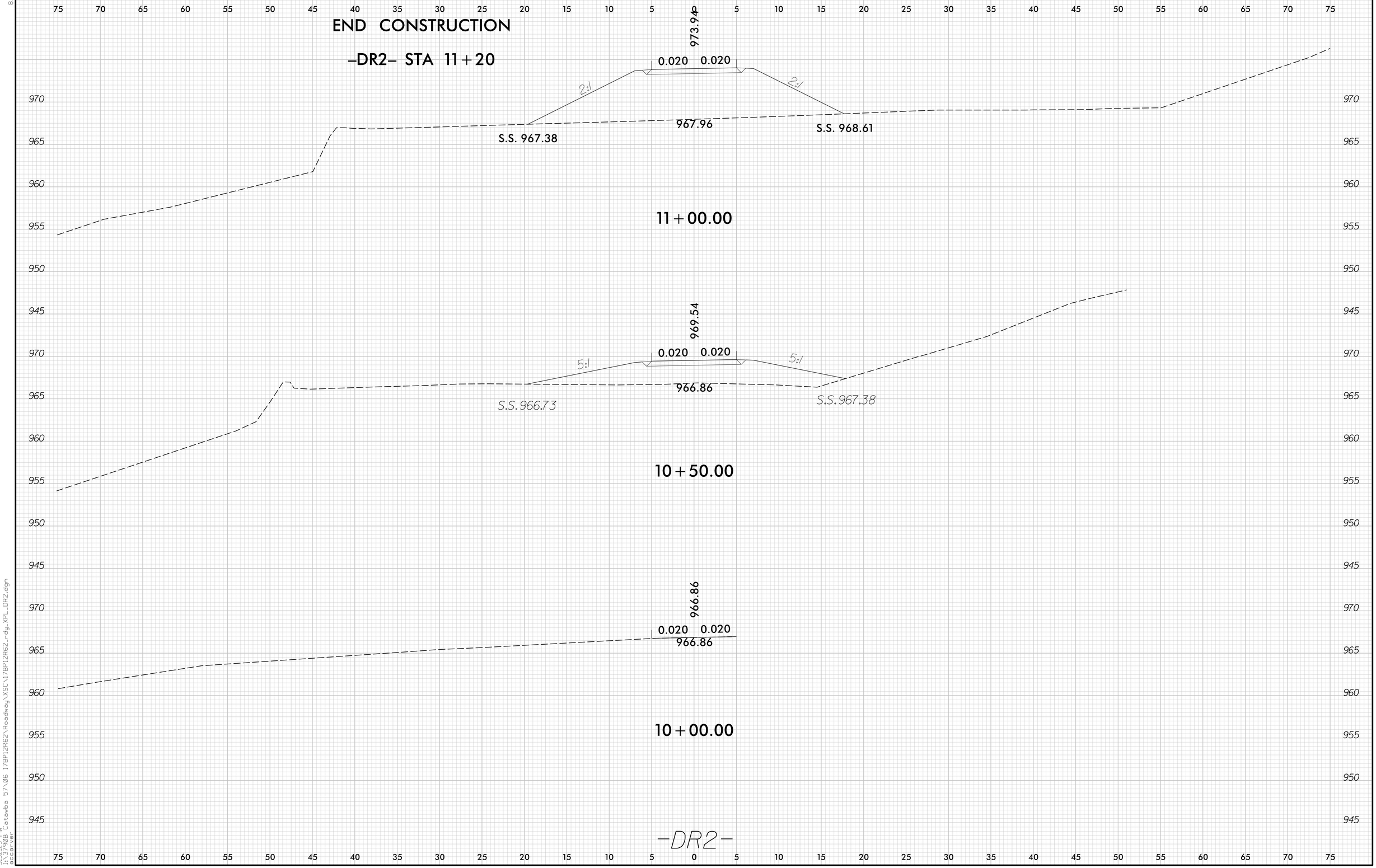

8/23/99

3:32:29 PM
I:\3790B Catawba 57\06 17BP12R62\Roadway\XSC\17BP12R62_rdy_XPL_DR2.dgn
accarver

0 2.5 5	PROJ. REFERENCE NO.	SHEET NO.
	17BP.12.R.62	X-9

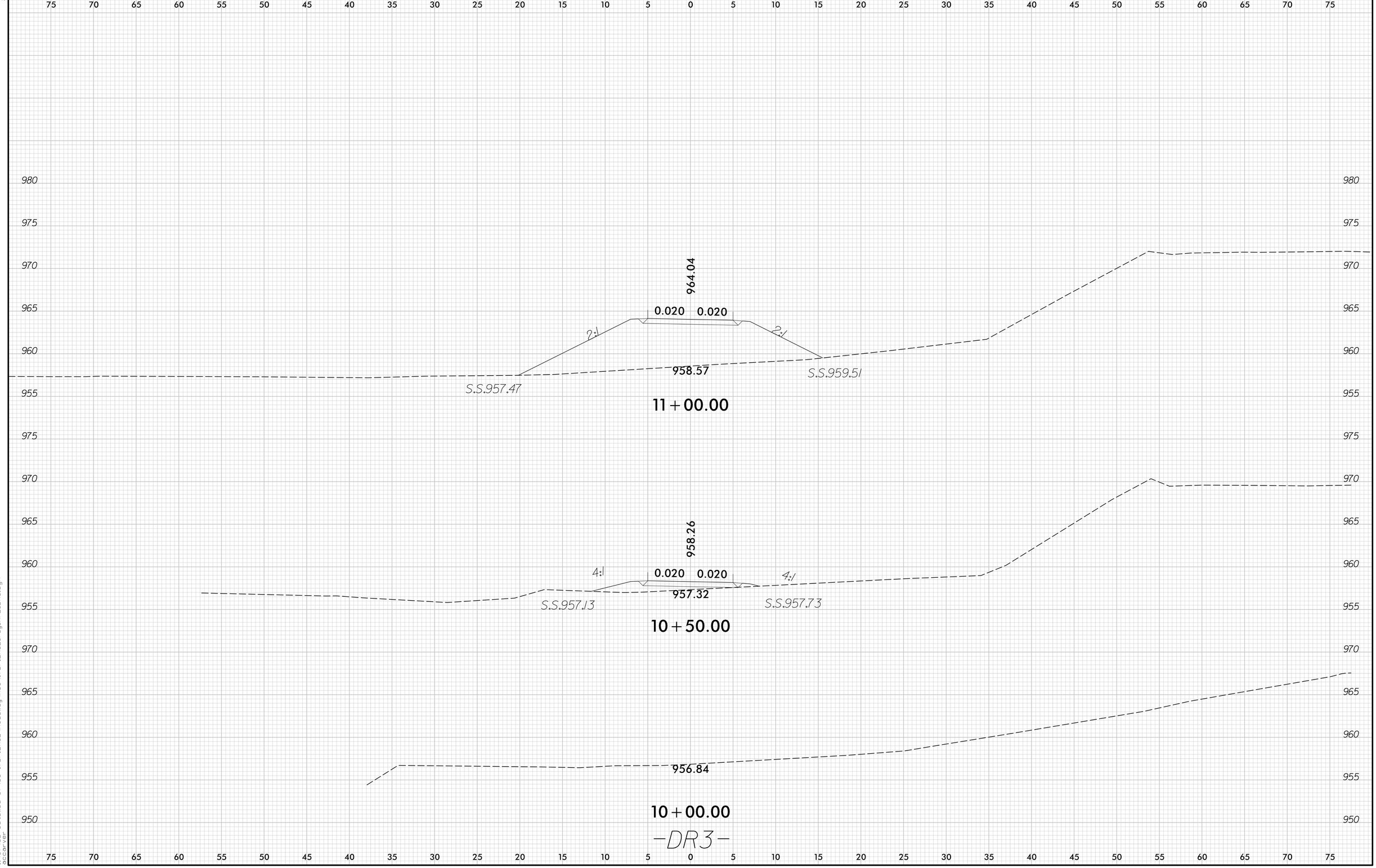

8/23/99

3:33:38 PM
17BP.12.R.62 Catawba 57\06 17BP12R62\Roadway\XSC\17BP12R62_rdy_XPL_DR3.dgn
acarver

PROJ. REFERENCE NO.	SHEET NO.
17BP.12.R.62	X-10

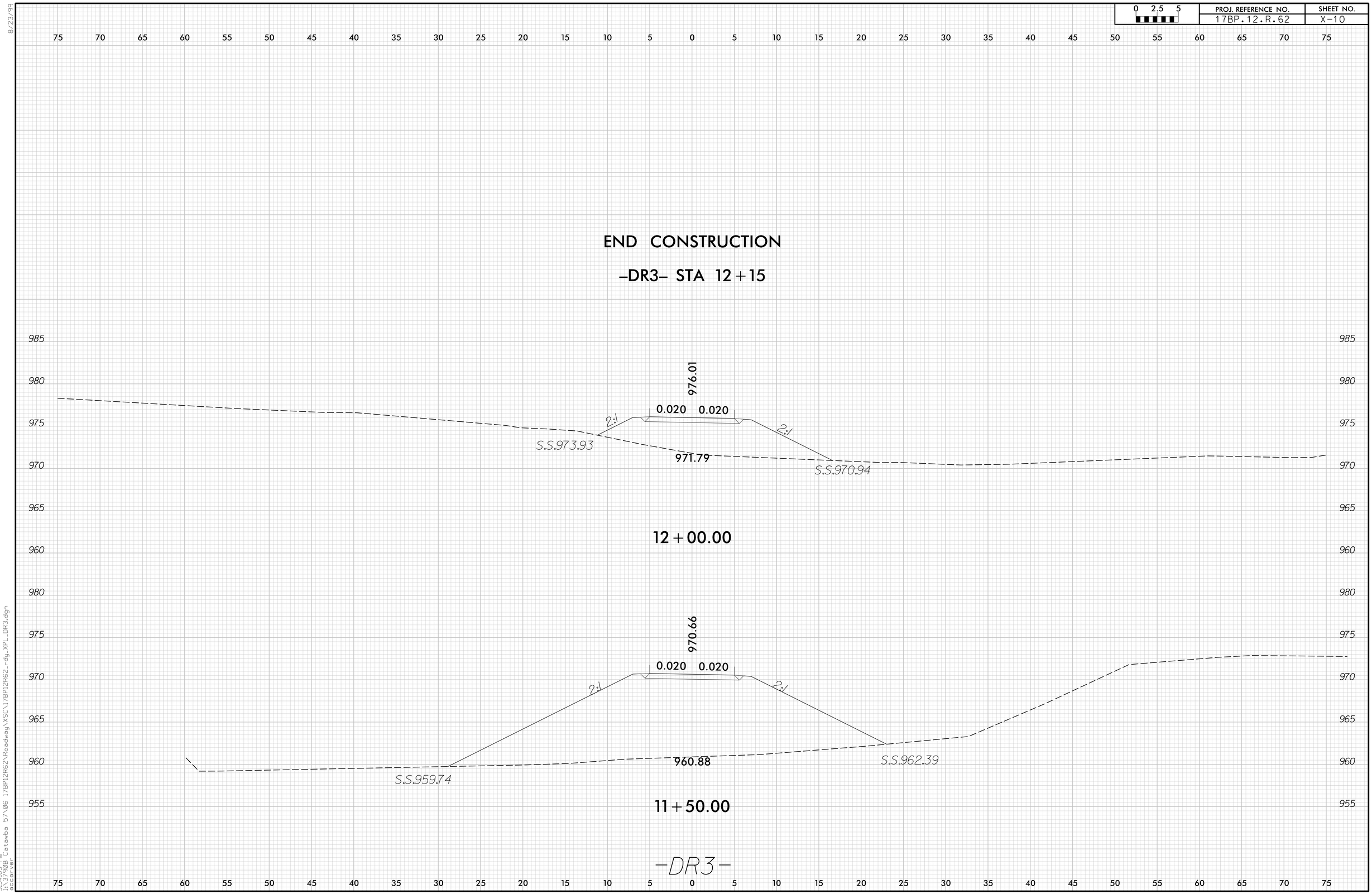

8/23/99

3:34:05 PM
I:\3790B Catawba 57\06 17BP12R62\Roadway\XSC\17BP12R62_rdy_XPL_DR3.dgn
accarver

DocuSign Envelope ID: FE0A09D2-0CB7-40E3-97F8-CFD3D98BBBA1

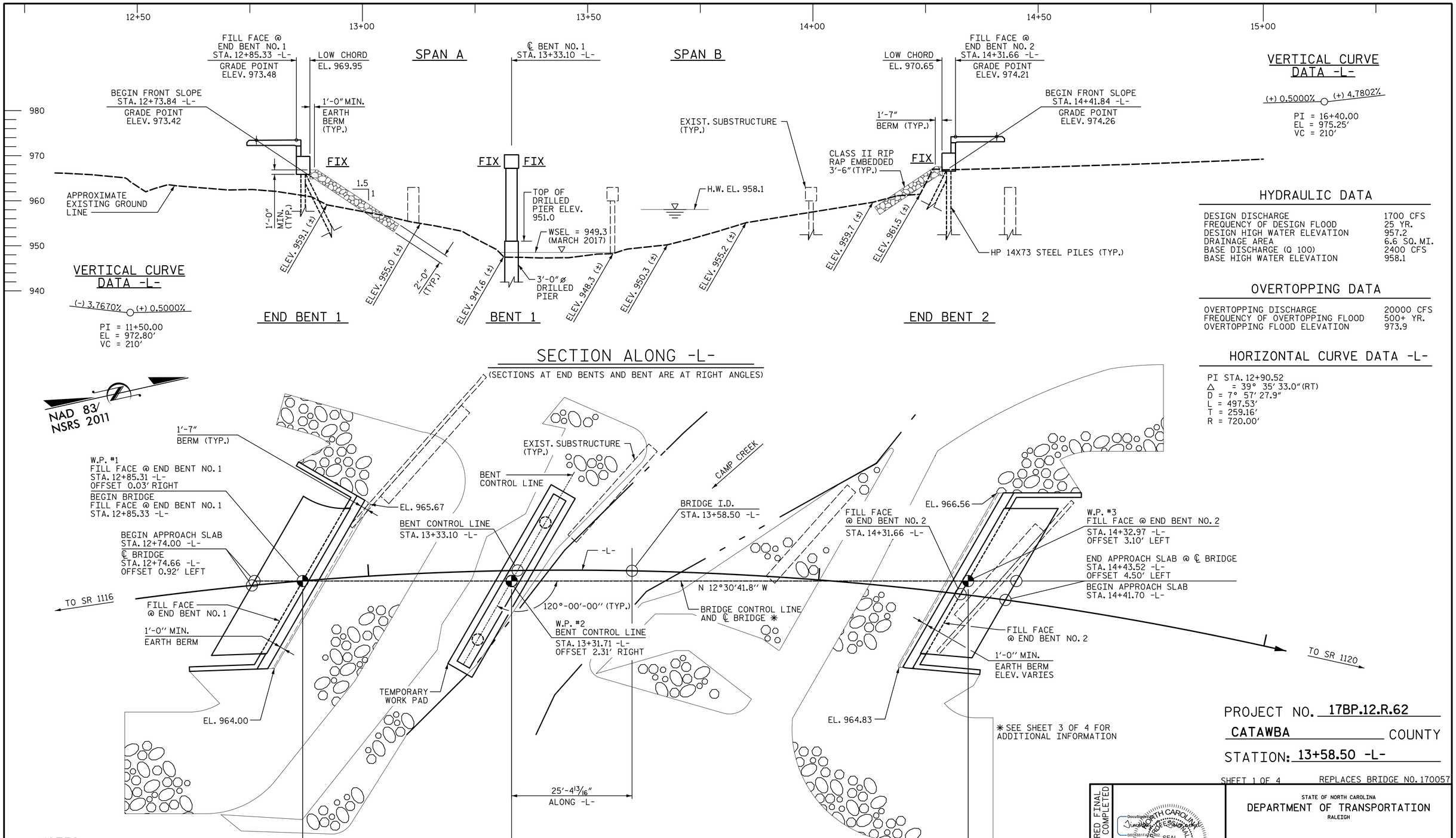

VERTICAL CURVE DATA -L-

(-) 3.7670% (+) 0.5000%

PI = 11+50.00
EL = 972.80'
VC = 210'

VERTICAL CURVE DATA -L-

(+) 0.5000% (+) 4.7802%

PI = 16+40.00
EL = 975.25'
VC = 210'

HYDRAULIC DATA

DESIGN DISCHARGE	1700 CFS
FREQUENCY OF DESIGN FLOOD	25 YR.
DESIGN HIGH WATER ELEVATION	957.2
DRAINAGE AREA	6.6 SQ. MI.
BASE DISCHARGE (Q 100)	2400 CFS
BASE HIGH WATER ELEVATION	958.1

OVERTOPPING DATA

OVERTOPPING DISCHARGE	20000 CFS
FREQUENCY OF OVERTOPPING FLOOD	500+ YR.
OVERTOPPING FLOOD ELEVATION	973.9

HORIZONTAL CURVE DATA -L-

PI STA. 12+90.52
Δ = 39° 35' 33.0" (RT)
D = 7° 57' 27.9"
L = 497.53'
T = 259.16'
R = 720.00'

NOTES

END BENTS AND BENT ARE PARALLEL.
PILES NOT SHOWN IN PLAN VIEW FOR CLARITY.
BOX BEAMS ARE PARALLEL TO BRIDGE CONTROL LINE.

PROJECT NO. 17BP.12.R.62
CATAWBA COUNTY
STATION: 13+58.50 -L-

SHEET 1 OF 4 REPLACES BRIDGE NO. 170057

DOCUMENT NOT CONSIDERED FINAL UNLESS ALL SIGNATURES COMPLETED

DocuSigned by: Timothy J. Townsend
NORTH CAROLINA PROFESSIONAL SEAL 34955 ENGINEER TIMOTHY J. TOWNSEND
9/17/2021

Mattern & Craig
ENGINEERS·SURVEYORS
12 BROAD STREET
ASHEVILLE, NORTH CAROLINA 28801
(828) 254-2201
FAX (828) 254-4562
NC LIC. NO. C-1154

STATE OF NORTH CAROLINA
DEPARTMENT OF TRANSPORTATION
RALEIGH

GENERAL DRAWING
BRIDGE 57 ON SR 1002
(OLD SHELBY ROAD)
OVER CAMP CREEK
BETWEEN SR 1120 AND SR 1116

REVISIONS								SHEET NO.
NO.	BY:	DATE:	NO.	BY:	DATE:			S-1
1			3					TOTAL SHEETS
2			4					26

DRAWN BY : DKA	DATE : 8-21	DESIGN ENGINEER OF RECORD: T. TOWNSEND	DATE : 9-21
CHECKED BY : TJT	DATE : 8-21		

DATE: 9/9/2021 TIME: 10:38:10 AM
FILE: I:\3790B - Div 12 Bridge 57 (Catawba Co)\Dwg\401.001.17BP.12.R.62_SMU_GD1_001_170057.dgn

DocuSign Envelope ID: FE0A09D2-0CB7-40E3-97F8-CFD3D98BBBA1

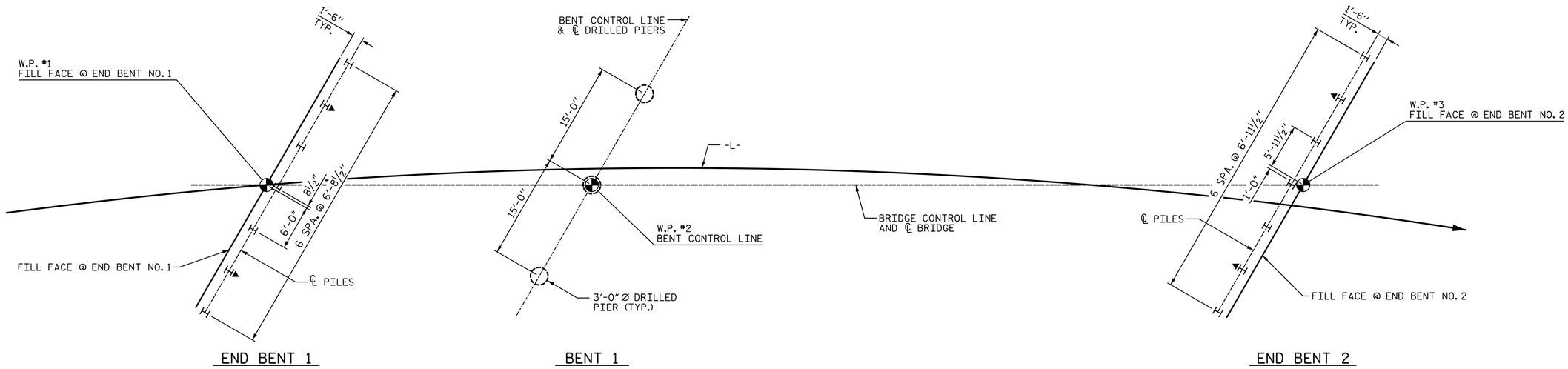

H▶ 3:12 BRACE PILE

FOUNDATION LAYOUT PLAN

ALL PILES ARE HP 14 X 73 STEEL PILES

FOUNDATION NOTES:

1) FOR PILES, SEE SECTION 450 OF THE STANDARD SPECIFICATIONS.

2) PILES AT END BENT NO. 1 ARE DESIGNED FOR A FACTORED RESISTANCE OF 95 TONS PER PILE.

3) DRIVE PILES AT END BENT NO. 1 TO A REQUIRED DRIVING RESISTANCE OF 160 TONS PER PILE.

4) PILES AT END BENT NO. 2 ARE DESIGNED FOR A FACTORED RESISTANCE OF 115 TONS PER PILE.

5) DRIVE PILES AT END BENT NO. 2 TO A REQUIRED DRIVING RESISTANCE OF 195 TONS PER PILE.

6) STEEL H-PILE POINTS ARE REQUIRED FOR STEEL H-PILES AT END BENT NO. 2. FOR STEEL PILE POINTS, SEE SECTION 450 OF THE STANDARD SPECIFICATIONS.

7) FOR DRILLED PIERS, SEE SECTION 411 OF THE STANDARD SPECIFICATIONS.

8) DRILLED PIERS AT BENT NO. 1 ARE DESIGNED FOR A FACTORED RESISTANCE OF 355 TONS PER PIER. CHECK FIELD CONDITIONS FOR THE REQUIRED TIP RESISTANCE OF 115 TSF.

9) PERMANENT STEEL CASINGS ARE REQUIRED FOR DRILLED PIERS AT BENT NO. 1. DO NOT EXTEND PERMANENT CASINGS BELOW ELEVATION 942 FT WITHOUT PRIOR APPROVAL FROM THE ENGINEER.

10) INSTALL PERMANENT STEEL CASINGS AT BENT NO. 1 BY VIBRATING, SCREWING OR DRIVING PERMANENT CASINGS BEFORE EXCAVATING OR DISTURBING ANY MATERIAL BELOW ELEVATION 942 FT.

11) INSTALL DRILLED PIERS AT BENT NO. 1 TO A TIP ELEVATION NO HIGHER THAN 934 FT WITH THE REQUIRED TIP RESISTANCE AND A PENETRATION OF AT LEAST 8 FT INTO ROCK AS DEFINED BY ARTICLE 411-1 OF THE STANDARD SPECIFICATIONS.

12) SID INSPECTIONS MAY BE REQUIRED FOR DRILLED PIERS. THE ENGINEER WILL DETERMINE THE NEED FOR SID INSPECTIONS. FOR SID INSPECTIONS, SEE SECTION 411 OF THE STANDARD SPECIFICATIONS.

13) CSL TUBES ARE REQUIRED AND CSL TESTING MAY BE REQUIRED FOR DRILLED PIERS. THE ENGINEER WILL DETERMINE THE NEED FOR CSL TESTING. FOR CSL TESTING, SEE SECTION 411 OF THE STANDARD SPECIFICATIONS.

14) THE SCOUR CRITICAL ELEVATION FOR BENT NO. 1 IS ELEVATION 941 FT. SCOUR CRITICAL ELEVATIONS ARE USED TO MONITOR POSSIBLE SCOUR PROBLEMS DURING THE LIFE OF THE STRUCTURE.

PROJECT NO. 17BP.12.R.62

CATAWBA COUNTY

STATION: 13+58.50 -L-

SHEET 2 OF 4

DOCUMENT NOT CONSIDERED FINAL UNLESS ALL SIGNATURES COMPLETED

NORTH CAROLINA PROFESSIONAL SEAL 34955 ENGINEER TIMOTHY J. TOWNSEND
DocuSigned by: Timothy J. Townsend
9/17/2021

Mattern & Craig
ENGINEERS·SURVEYORS
12 BROAD STREET
ASHEVILLE, NORTH CAROLINA 28801
(828) 254-2201
FAX (828) 254-4562
NC LIC. NO. C-1154

STATE OF NORTH CAROLINA
DEPARTMENT OF TRANSPORTATION
RALEIGH

FOUNDATION LAYOUT

REVISIONS						SHEET NO.
NO.	BY:	DATE:	NO.	BY:	DATE:	S-2
1			3			TOTAL SHEETS
2			4			26

DRAWN BY : DKA	DATE : 8-21	DESIGN ENGINEER OF RECORD: T. TOWNSEND	DATE : 9-21
CHECKED BY : TJT	DATE : 8-21		

DATE: 9/9/2021 TIME: 10:38:13 AM
FILE: I:\3790B - Div 12 Bridge 57 (Catawba Co)\Dwg\401.003.17BP.12.R.62_SMU_FL_002.170057.dgn

DocuSign Envelope ID: FE0A09D2-0CB7-40E3-97F8-CFD3D98BBBA1

NAD 83/
NSRS 2011

NOTE: ALL ANGLES ARE MEASURED TO THE TANGENT OF THE -L-
LA @ 125°-34′-05″
LB @ 124°-40′-00″
LC @ 120°-51′-56″
LD @ 113°-01′-21″
LE @ 112°-13′-25″

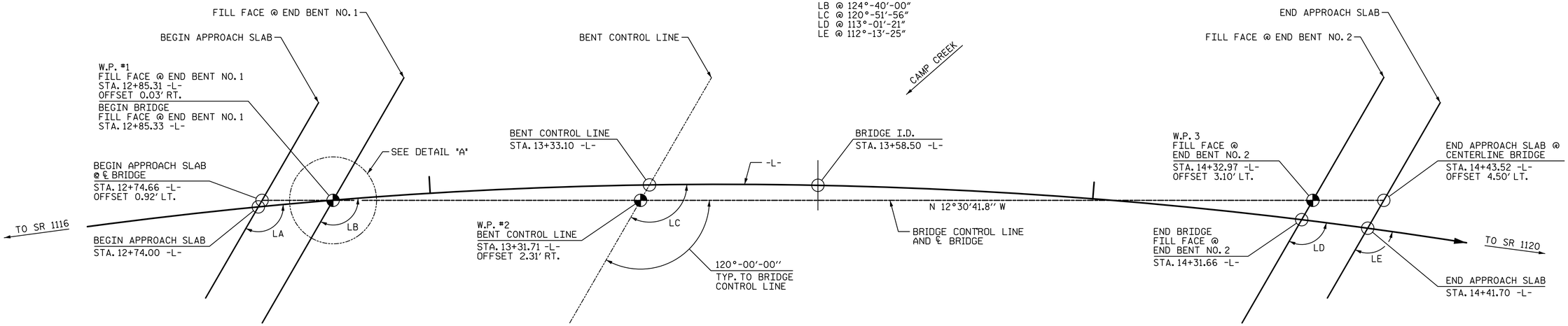

BRIDGE CONTROL LINE LAYOUT

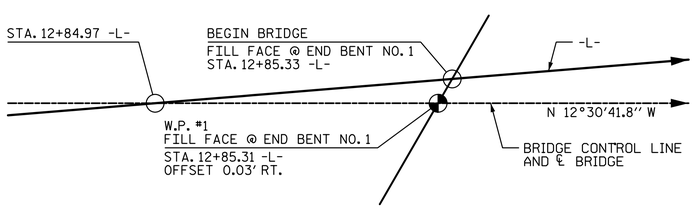

DETAIL "A"

PROJECT NO. 17BP.12.R.62
CATAWBA COUNTY
STATION: 13+58.50 -L-

SHEET 3 OF 4

DOCUMENT NOT CONSIDERED FINAL UNLESS ALL SIGNATURES COMPLETED

DocuSigned by: Timothy J. Townsend
B6C9B81A2B8D4...
NORTH CAROLINA PROFESSIONAL SEAL 34955 ENGINEER TIMOTHY J. TOWNSEND
9/17/2021

Mattern & Craig
ENGINEERS·SURVEYORS
12 BROAD STREET
ASHEVILLE, NORTH CAROLINA 28801
(828) 254-2201
FAX (828) 254-4562
NC LIC. NO. C-1154

STATE OF NORTH CAROLINA
DEPARTMENT OF TRANSPORTATION
RALEIGH

BRIDGE CONTROL LINE LAYOUT

REVISIONS						SHEET NO.
NO.	BY:	DATE:	NO.	BY:	DATE:	S-3
1			3			TOTAL SHEETS
2			4			26

DRAWN BY : DKA	DATE : 8-21	DESIGN ENGINEER OF RECORD: T. TOWNSEND	DATE : 9-21
CHECKED BY : TJT	DATE : 8-21		

DATE: 9/9/2021 TIME: 10:38:16 AM
FILE: I:\3790B - Div 12 Bridge 57 (Catawba Co)\Dwg\401.005.17BP.12.R.62_SMU_GD2_003.170057.dgn

DocuSign Envelope ID: FE0A09D2-0CB7-40E3-97F8-CFD3D98BBBA1

B.M. #1: RR SPIKE IN BASE OF 16" WALNUT -L- STA. 12+22.03 95.97' RT. EL. 956.78'

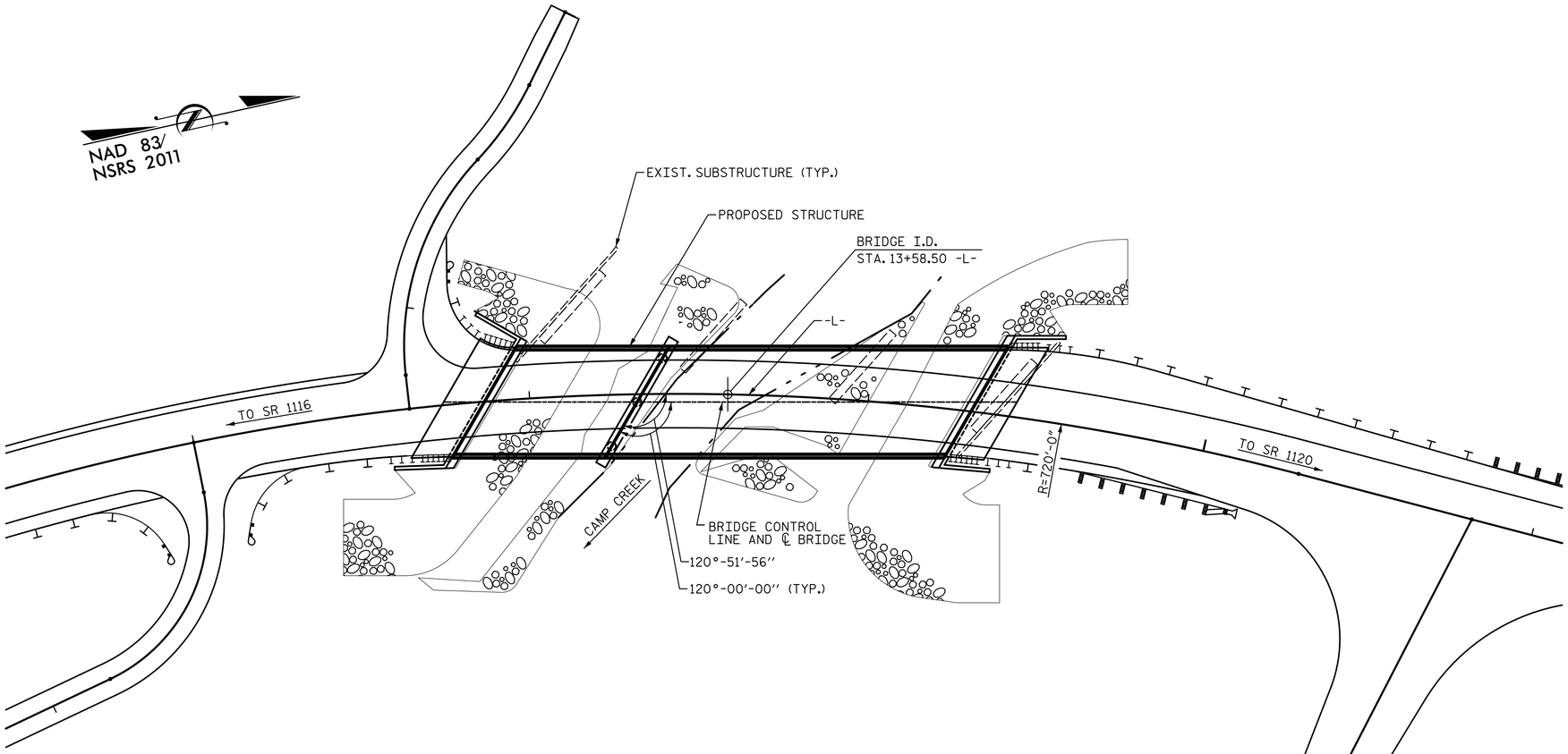

NO KNOWN UTILITY CONFLICTS

LOCATION SKETCH

NOTES

ASSUMED LIVE LOAD = HL-93 OR ALTERNATE LOADING.

THIS BRIDGE HAS BEEN DESIGNED IN ACCORDANCE WITH THE AASHTO LRFD BRIDGE DESIGN SPECIFICATIONS.

THIS BRIDGE IS LOCATED IN SEISMIC ZONE 1.

FOR OTHER DESIGN DATA AND GENERAL NOTES, SEE SHEET SN.

FOR SUBMITTAL OF WORKING DRAWINGS, SEE SPECIAL PROVISIONS.

FOR FALSEWORK AND FORMWORK, SEE SPECIAL PROVISIONS.

FOR CRANE SAFETY, SEE SPECIAL PROVISIONS.

FOR GROUT FOR STRUCTURES, SEE SPECIAL PROVISIONS.

INASMUCH AS THE PAINT SYSTEM ON THE EXISTING STRUCTURAL STEEL CONTAINS LEAD, THE CONTRACTOR'S ATTENTION IS DIRECTED TO ARTICLE 107-1 OF THE STANDARD SPECIFICATIONS. ANY COSTS RESULTING FROM COMPLIANCE WITH APPLICABLE STATE OR FEDERAL REGULATIONS PERTAINING TO HANDLING OF MATERIALS CONTAINING LEAD BASED PAINT SHALL BE INCLUDED IN THE BID PRICE FOR "REMOVAL OF EXISTING STRUCTURE."

THE EXISTING STRUCTURE CONSISTING OF THREE SPANS; 1 @ 45'-3", 1 @ 45'-0", 1 @ 45'-3"; WITH A 24'-0" CLEAR ROADWAY WIDTH ON A REINFORCED CONCRETE DECK SUPPORTED ON STEEL I GIRDERS WITH A SUBSTRUCTURE CONSISTING OF REINFORCED CONCRETE CAPS ON STEEL PILES SHALL BE REMOVED. THE EXISTING BRIDGE IS PRESENTLY POSTED FOR LOAD LIMIT. SHOULD THE STRUCTURAL INTEGRITY OF THE BRIDGE DETERIORATE DURING CONSTRUCTION OF THE PROPOSED BRIDGE, A LOAD LIMIT MAY BE POSTED AND MAY BE REDUCED AS FOUND NECESSARY DURING THE LIFE OF THE PROJECT. FOR REMOVAL OF EXISTING STRUCTURE, SEE PROJECT SPECIAL PROVISIONS.

THE SUBSTRUCTURE OF THE EXISTING BRIDGE INDICATED ON THE PLANS IS FROM THE BEST INFORMATION AVAILABLE. SINCE THIS INFORMATION IS SHOWN FOR THE CONVENIENCE OF THE CONTRACTOR, THE CONTRACTOR SHALL HAVE NO CLAIM WHATSOEVER AGAINST THE DEPARTMENT OF TRANSPORTATION FOR ANY DELAYS OR ADDITIONAL COST INCURRED BASED ON DIFFERENCES BETWEEN THE EXISTING BRIDGE SUBSTRUCTURE SHOWN ON THE PLANS AND THE ACTUAL CONDITIONS AT THE PROJECT SITE.

REMOVAL OF THE EXISTING BRIDGE SHALL BE PERFORMED IN A MANNER THAT PREVENTS DEBRIS FROM FALLING INTO THE WATER. THE CONTRACTOR SHALL SUBMIT DEMOLITION PLANS FOR REVIEW AND REMOVE THE BRIDGE IN ACCORDANCE WITH ARTICLE 402-2 OF THE STANDARD SPECIFICATIONS.

THIS STRUCTURE HAS BEEN DESIGNED IN ACCORDANCE WITH "HEC 18-EVALUATING SCOUR AT BRIDGES."

FOR EROSION CONTROL MEASURES, SEE EROSION CONTROL PLANS.

ASPHALT WEARING SURFACE IS INCLUDED IN ROADWAY QUANTITY ON ROADWAY PLANS.

FOR ASBESTOS ASSESSMENT FOR BRIDGE DEMOLITION AND RENOVATION ACTIVITIES, SEE SPECIAL PROVISIONS.

FOR CONSTRUCTION, MAINTENANCE AND REMOVAL OF TEMPORARY ACCESS, SEE SPECIAL PROVISIONS.

TOTAL BILL OF MATERIAL

	CONSTRUCTION, MAINTENANCE & REMOVAL OF TEMP ACCESS	REMOVAL OF EXISTING STRUCTURE	ASBESTOS ASSESMENT	3'-0" Ø DRILLED PIER IN SOIL	3'-0" Ø DRILLED PIER NOT IN SOIL	PERMANENT STEEL CASING FOR 3'-0" Ø DRILLED PIER	SID INSPECTION	CSL TESTING	UNCLASSIFIED STRUCTURE EXCAVATION	CLASS A CONCRETE	BRIDGE APPROACH SLABS	REINFORCING STEEL
	LUMP SUM	LUMP SUM	LUMP SUM	LIN. FT.	LIN. FT.	LIN. FT.	EACH	EACH	LUMP SUM	CU. YDS.	LUMP SUM	LBS.
SUPERSTRUCTURE	LUMP SUM	LUMP SUM										
END BENT NO. 1										33.7		5257
BENT NO. 1				23	28	27	1	1		23.8		11401
END BENT NO. 2										34.0		5004
TOTAL	LUMP SUM	LUMP SUM	LUMP SUM	23	28	27	1	1	LUMP SUM	91.5	LUMP SUM	21662

TOTAL BILL OF MATERIAL

	SPIRAL COLUMN REINFORCING STEEL	PILE DRIVING EQUIPMENT SETUP FOR HP 14X73 STEEL PILES	HP 14X73 STEEL PILES		STEEL PILE POINTS	VERTICAL CONCRETE BARRIER RAIL	RIP RAP CLASS II (2'-0" THICK)	GEOTEXTILE FOR DRAINAGE	ELASTOMERIC BEARINGS	3'-0" X 3'-3" PRESTRESSED CONCRETE BOX BEAMS	
	LBS.	EA.	NO.	LIN. FT.	NO.	LIN. FT.	TONS	SQ. YD.	LUMP SUM	NO.	LIN. FT.
SUPERSTRUCTURE						290				22	1595
END BENT NO. 1		7	7	225			135	165			
BENT NO. 1	1746										
END BENT NO. 2		7	7	215	7		206	255			
TOTAL	1746	14	14	440	7	290	341	420	LUMP SUM	22	1595

SAMPLE BAR REPLACEMENT

SIZE	LENGTH
#3	6'-2"
#4	7'-4"
#5	8'-6"
#6	9'-8"
#7	10'-10"
#8	12'-0"
#9	13'-2"
#10	14'-6"
#11	15'-10"

PROJECT NO. 17BP.12.R.62

CATAWBA COUNTY

STATION: 13+58.50 -L-

SHEET 4 OF 4

DRAWN BY : DKA DATE : 8-21

CHECKED BY : TJT DATE : 8-21

DESIGN ENGINEER OF RECORD: T. TOWNSEND DATE : 9-21

DOCUMENT NOT CONSIDERED FINAL UNLESS ALL SIGNATURES COMPLETED

DocuSigned by: Timothy J. Townsend B6C2681FA7B42... NORTH CAROLINA PROFESSIONAL SEAL 34955 ENGINEER TIMOTHY J. TOWNSEND 9/17/2021

Mattern & Craig
ENGINEERS•SURVEYORS
12 BROAD STREET
ASHEVILLE, NORTH CAROLINA 28801
(828) 254-2201
FAX (828) 254-4562
NC LIC. NO. C-1154

STATE OF NORTH CAROLINA
DEPARTMENT OF TRANSPORTATION
RALEIGH

GENERAL NOTES, LOCATION SKETCH, & TOTAL BILL OF MATERIAL

REVISIONS							
NO.	BY:	DATE:	NO.	BY:	DATE:	SHEET NO.	S-4
1			3			TOTAL SHEETS	26
2			4				

DATE: 9/9/2021 TIME: 10:38:24 AM
FILE: I:\3790B - Div 12 Bridge 57 (Catawba Co)\Dwg\401_007_17BP.12.R.62_SMU_GD3_004_170057.dgn

DocuSign Envelope ID: FE0A09D2-0CB7-40E3-97F8-CFD3D98BBBA1

LOAD AND RESISTANCE FACTOR RATING (LRFD) SUMMARY FOR PRESTRESSED CONCRETE GIRDERS

LEVEL		VEHICLE	WEIGHT (W) (TONS)	CONTROLLING LOAD RATING	MINIMUM RATING FACTORS (RF)	TONS = W X RF	STRENGTH I LIMIT STATE											SERVICE III LIMIT STATE						COMMENT NUMBER
								MOMENT					SHEAR						MOMENT					
							LIVELOAD FACTORS	DISTRIBUTION FACTORS (DF)	RATING FACTOR	SPAN	GIRDER LOCATION	DISTANCE FROM LEFT END OF SPAN (ft)	DISTRIBUTION FACTORS (DF)	RATING FACTOR	SPAN	GIRDER LOCATION	DISTANCE FROM LEFT END OF SPAN (ft)	LIVELOAD FACTORS	DISTRIBUTION FACTORS (DF)	RATING FACTOR	SPAN	GIRDER LOCATION	DISTANCE FROM LEFT END OF SPAN (ft)	
DESIGN LOAD RATING		HL-93(Inv)	N/A	1	3.75	--	1.75	0.260	5.31	A	EL	21.63	0.620	3.75	A	EL	35.13	0.80	0.260	**5.78**	A	EL	**21.63**	
		HL-93(Opr)	N/A	--	4.89	--	1.35	0.260	6.89	A	EL	21.63	0.620	4.89	A	EL	35.13	N/A	--	--	--	--	--	
		HS-20(Inv)	36.000	2	4.36	156.96	1.75	0.260	6.51	A	EL	21.63	0.620	**4.36**	A	EL	**35.13**	0.80	0.260	7.08	A	EL	21.63	
		HS-20(Opr)	36.000	--	5.68	204.48	1.35	0.260	8.45	A	EL	21.63	0.620	5.68	A	EL	35.13	N/A	--	--	--	--	--	
LEGAL LOAD RATING	SV	SNSH	13.500	--	11.64	157.14	1.4	0.260	15.80	A	EL	21.63	0.620	11.64	A	EL	35.13	0.80	0.260	13.74	A	EL	21.63	
		SNGARBS2	20.000	--	8.70	174.00	1.4	0.260	12.79	A	EL	26.13	0.620	8.70	A	EL	8.13	0.80	0.260	11.14	A	EL	21.63	
		SNAGRIS2	22.000	--	8.25	181.50	1.4	0.260	12.38	A	EL	17.13	0.620	8.25	A	EL	35.13	0.80	0.260	10.81	A	EL	17.13	
		SNCOTTS3	27.250	--	5.80	158.05	1.4	0.260	7.89	A	EL	21.63	0.620	5.80	A	EL	35.13	0.80	0.260	6.86	A	EL	21.63	
		SNAGGRS4	34.925	--	5.12	178.82	1.4	0.260	6.98	A	EL	21.63	0.620	5.12	A	EL	35.13	0.80	0.260	6.07	A	EL	21.63	
		SNS5A	35.550	--	5.38	191.26	1.4	0.260	6.80	A	EL	21.63	0.620	5.38	A	EL	35.13	0.80	0.260	5.91	A	EL	21.63	
		SNS6A	39.950	--	5.02	200.55	1.4	0.260	6.41	A	EL	21.63	0.620	5.02	A	EL	8.13	0.80	0.260	5.58	A	EL	21.63	
		SNS7B	42.000	--	5.10	214.20	1.4	0.260	6.11	A	EL	21.63	0.620	5.10	A	EL	35.13	0.80	0.260	5.32	A	EL	21.63	
	TTST	TNAGRIT3	33.000	--	5.82	192.06	1.4	0.260	7.87	A	EL	21.63	0.620	5.82	A	EL	35.13	0.80	0.260	6.77	A	EL	21.63	
		TNT4A	33.075	--	5.52	182.57	1.4	0.260	7.96	A	EL	21.63	0.620	5.52	A	EL	35.13	0.80	0.260	6.29	A	EL	21.63	
		TNT6A	41.600	--	5.50	228.80	1.4	0.260	6.69	A	EL	21.63	0.620	5.50	A	EL	35.13	0.80	0.260	6.14	A	EL	21.63	
		TNT7A	42.000	--	4.99	209.58	1.4	0.260	6.82	A	EL	21.63	0.620	4.99	A	EL	8.13	0.80	0.260	6.85	A	EL	21.63	
		TNT7B	42.000	--	4.89	205.38	1.4	0.260	7.10	A	EL	17.13	0.620	4.89	A	EL	35.13	0.80	0.260	6.92	A	EL	21.63	
		TNAGRIT4	43.000	--	4.61	198.23	1.4	0.260	6.77	A	EL	21.63	0.620	4.61	A	EL	8.13	0.80	0.260	5.82	A	EL	21.63	
		TNAGT5A	45.000	--	4.82	216.90	1.4	0.260	6.29	A	EL	21.63	0.620	4.82	A	EL	8.13	0.80	0.260	5.93	A	EL	21.63	
		TNAGT5B	45.000	3	4.41	198.45	1.4	0.260	6.14	A	EL	21.63	0.620	4.41	A	EL	8.13	0.80	0.260	**6.18**	A	EL	**21.63**	

LOAD FACTORS:

DESIGN LOAD RATING FACTORS	LIMIT STATE	γ_{DC}	γ_{DW}
	STRENGTH I	1.25	1.50
	SERVICE III	1.00	1.00

NOTES:

MINIMUM RATING FACTORS ARE BASED ON THE STRENGTH I AND SERVICE III LIMIT STATES.

ALLOWABLE STRESSES FOR SERVICE III LIMIT STATE ARE AS REQUIRED FOR DESIGN.

COMMENTS:

1.
2.
3.
4.

(#) CONTROLLING LOAD RATING

(1) DESIGN LOAD RATING (HL-93)

(2) DESIGN LOAD RATING (HS-20)

(3) LEGAL LOAD RATING **

** SEE CHART FOR VEHICLE TYPE

GIRDER LOCATION

I - INTERIOR GIRDER
EL - EXTERIOR LEFT GIRDER
ER - EXTERIOR RIGHT GIRDER

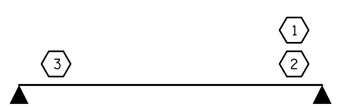

LRFR SUMMARY

FOR SPAN 'A'

PROJECT NO. 17BP.12.R.62

CATAWBA COUNTY

STATION: 13+58.50 -L-

SHEET 1 OF 2

DOCUMENT NOT CONSIDERED FINAL UNLESS ALL SIGNATURES COMPLETED

NORTH CAROLINA PROFESSIONAL SEAL 34955 ENGINEER TIMOTHY J. TOWNSEND

DocuSigned by: Timothy J. Townsend B0C2B481FA2B4D... 9/17/2021

Mattern & Craig
ENGINEERS·SURVEYORS
12 BROAD STREET
ASHEVILLE, NORTH CAROLINA 28801
(828) 254-2201
FAX (828) 254-4562
NC LIC. NO. C-1154

STATE OF NORTH CAROLINA
DEPARTMENT OF TRANSPORTATION
RALEIGH

LRFR SUMMARY FOR
45' BOX BEAM UNIT
60° SKEW & 120° SKEW
(NON-INTERSTATE TRAFFIC)

REVISIONS						SHEET NO.
NO.	BY:	DATE:	NO.	BY:	DATE:	S-5
1			3			TOTAL SHEETS
2			4			26

DRAWN BY : CTM	DATE : 8-21	DESIGN ENGINEER OF RECORD: T. TOWNSEND	DATE : 9-21
CHECKED BY : TJT	DATE : 8-21		

DATE: 9/9/2021 TIME: 10:38:28 AM
FILE: I:\3790B - Div 12 Bridge 57 (Catawba Co)\Dwgs\401_009_17BP.12.R.62_SMU_LRFR_005_170057.dgn

DocuSign Envelope ID: FE0A09D2-0CB7-40E3-97F8-CFD3D98BBBA1

LOAD AND RESISTANCE FACTOR RATING (LRFD) SUMMARY FOR PRESTRESSED CONCRETE GIRDERS

LEVEL		VEHICLE	WEIGHT (W) (TONS)	CONTROLLING LOAD RATING	MINIMUM RATING FACTORS (RF)	TONS = W X RF	STRENGTH I LIMIT STATE											SERVICE III LIMIT STATE						COMMENT NUMBER
								MOMENT					SHEAR						MOMENT					
							LIVELOAD FACTORS	DISTRIBUTION FACTORS (DF)	RATING FACTOR	SPAN	GIRDER LOCATION	DISTANCE FROM LEFT END OF SPAN (ft)	DISTRIBUTION FACTORS (DF)	RATING FACTOR	SPAN	GIRDER LOCATION	DISTANCE FROM LEFT END OF SPAN (ft)	LIVELOAD FACTORS	DISTRIBUTION FACTORS (DF)	RATING FACTOR	SPAN	GIRDER LOCATION	DISTANCE FROM LEFT END OF SPAN (ft)	
DESIGN LOAD RATING		HL-93(Inv)	N/A	**1**	1.146	--	1.75	0.246	1.4	B	EL	49.134	0.614	1.15	B	EL	9.827	0.80	0.246	**1.15**	B	EL	**49.134**	
		HL-93(Opr)	N/A	--	1.486	--	1.35	0.246	1.81	B	EL	49.134	0.614	1.49	B	EL	9.827	N/A	--	--	--	--	--	
		HS-20(Inv)	36.000	**2**	1.519	54.686	1.75	0.246	1.95	B	EL	49.134	0.614	**1.52**	B	EL	**9.827**	0.80	0.246	1.60	B	EL	49.134	
		HS-20(Opr)	36.000	--	1.969	70.889	1.35	0.246	2.52	B	EL	49.134	0.614	1.97	B	EL	9.827	N/A	--	--	--	--	--	
LEGAL LOAD RATING	SV	SNSH	13.500	--	3.795	51.239	1.4	0.246	5.76	B	EL	49.134	0.614	4.67	B	EL	9.827	0.80	0.246	3.80	B	EL	49.134	
		SNGARBS2	20.000	--	2.75	55	1.4	0.246	4.18	B	EL	49.134	0.614	3.27	B	EL	9.827	0.80	0.246	2.75	B	EL	49.134	
		SNAGRIS2	22.000	--	2.573	56.599	1.4	0.246	3.91	B	EL	49.134	0.614	3.02	B	EL	9.827	0.80	0.246	2.57	B	EL	49.134	
		SNCOTTS3	27.250	--	1.886	51.405	1.4	0.246	2.86	B	EL	49.134	0.614	2.32	B	EL	9.827	0.80	0.246	1.89	B	EL	49.134	
		SNAGGRS4	34.925	--	1.546	54.002	1.4	0.246	2.35	B	EL	49.134	0.614	1.9	B	EL	9.827	0.80	0.246	1.55	B	EL	49.134	
		SNS5A	35.550	--	1.514	53.825	1.4	0.246	2.3	B	EL	49.134	0.614	1.9	B	EL	9.827	0.80	0.246	1.51	B	EL	49.134	
		SNS6A	39.950	--	1.377	55.004	1.4	0.246	2.09	B	EL	49.134	0.614	1.72	B	EL	9.827	0.80	0.246	1.38	B	EL	49.134	
		SNS7B	42.000	--	1.311	55.05	1.4	0.246	1.99	B	EL	49.134	0.614	1.68	B	EL	9.827	0.80	0.246	1.31	B	EL	49.134	
	TTST	TNAGRIT3	33.000	--	1.675	55.287	1.4	0.246	2.54	B	EL	49.134	0.614	2.06	B	EL	9.827	0.80	0.246	1.68	B	EL	49.134	
		TNT4A	33.075	--	1.679	55.547	1.4	0.246	2.55	B	EL	49.134	0.614	2.02	B	EL	9.827	0.80	0.246	1.68	B	EL	49.134	
		TNT6A	41.600	--	1.362	56.644	1.4	0.246	2.07	B	EL	49.134	0.614	1.76	B	EL	9.827	0.80	0.246	1.36	B	EL	49.134	
		TNT7A	42.000	--	1.362	57.22	1.4	0.246	2.07	B	EL	49.134	0.614	1.73	B	EL	9.827	0.80	0.246	1.36	B	EL	49.134	
		TNT7B	42.000	--	1.395	58.575	1.4	0.246	2.12	B	EL	49.134	0.614	1.65	B	EL	9.827	0.80	0.246	1.39	B	EL	49.134	
		TNAGRIT4	43.000	--	1.338	57.52	1.4	0.246	2.03	B	EL	49.134	0.614	1.6	B	EL	9.827	0.80	0.246	1.34	B	EL	49.134	
		TNAGT5A	45.000	--	1.266	56.99	1.4	0.246	1.92	B	EL	49.134	0.614	1.57	B	EL	9.827	0.80	0.246	1.27	B	EL	49.134	
		TNAGT5B	45.000	**3**	1.256	56.51	1.4	0.246	1.91	B	EL	49.134	0.614	1.53	B	EL	9.827	0.80	0.246	**1.26**	B	EL	**49.134**	

LOAD FACTORS:

DESIGN LOAD RATING FACTORS	LIMIT STATE	γ_{DC}	γ_{DW}
	STRENGTH I	1.25	1.50
	SERVICE III	1.00	1.00

NOTES:

MINIMUM RATING FACTORS ARE BASED ON THE STRENGTH I AND SERVICE III LIMIT STATES.

ALLOWABLE STRESSES FOR SERVICE III LIMIT STATE ARE AS REQUIRED FOR DESIGN.

COMMENTS:

1.
2.
3.
4.

(#) CONTROLLING LOAD RATING

(1) DESIGN LOAD RATING (HL-93)

(2) DESIGN LOAD RATING (HS-20)

(3) LEGAL LOAD RATING **

** SEE CHART FOR VEHICLE TYPE

GIRDER LOCATION

I - INTERIOR GIRDER
EL - EXTERIOR LEFT GIRDER
ER - EXTERIOR RIGHT GIRDER

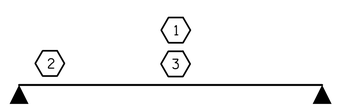

LRFR SUMMARY

FOR SPAN 'B'

PROJECT NO. 17BP.12.R.62

CATAWBA COUNTY

STATION: 13+58.50 -L-

SHEET 2 OF 2

DOCUMENT NOT CONSIDERED FINAL UNLESS ALL SIGNATURES COMPLETED

NORTH CAROLINA PROFESSIONAL SEAL 34955 ENGINEER TIMOTHY J. TOWNSEND

DocuSigned by: Timothy J. Townsend B0C2B481FA2F4D... 9/17/2021

Mattern & Craig
ENGINEERS·SURVEYORS
12 BROAD STREET
ASHEVILLE, NORTH CAROLINA 28801
(828) 254-2201
FAX (828) 254-4562
NC LIC. NO. C-1154

STATE OF NORTH CAROLINA
DEPARTMENT OF TRANSPORTATION
RALEIGH

LRFR SUMMARY FOR
100' BOX BEAM UNIT
60° SKEW & 120° SKEW
(NON-INTERSTATE TRAFFIC)

REVISIONS						SHEET NO.
NO.	BY:	DATE:	NO.	BY:	DATE:	S-6
1			3			TOTAL SHEETS
2			4			26

DRAWN BY : CTM	DATE : 8-21	DESIGN ENGINEER OF RECORD: T. TOWNSEND	DATE : 9-21
CHECKED BY : TJT	DATE : 8-21		

DATE: 9/9/2021 TIME: 10:38:32 AM
FILE: I:\3790B - Div 12 Bridge 57 (Catawba Co)\Dwgs\401_011_17BP.12.R.62_SMU_LRFR_006_170057.dgn

DocuSign Envelope ID: FE0A09D2-0CB7-40E3-97F8-CFD3D98BBBA1

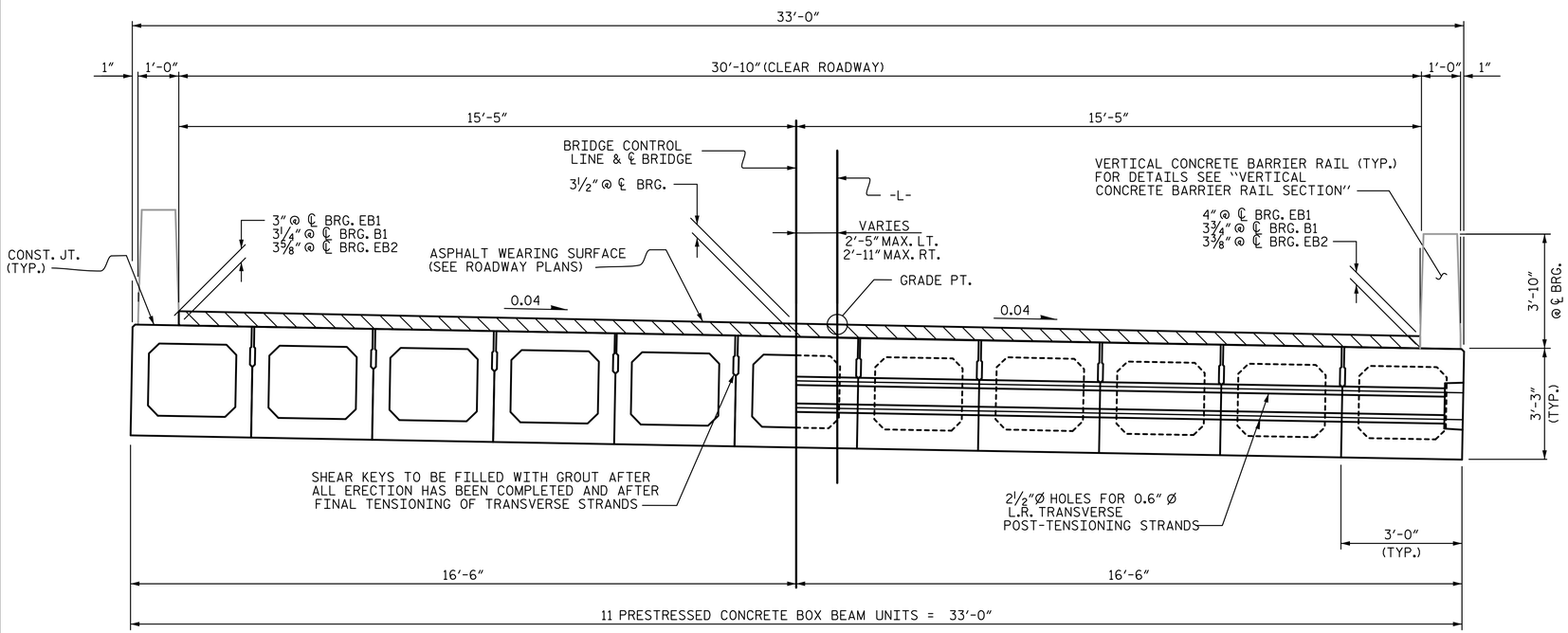

HALF SECTION
THROUGH VOIDS

TYPICAL SECTION

HALF SECTION
AT INTERMEDIATE DIAPHRAGMS

THE MAXIMUM BARRIER RAIL HEIGHT AND ASPHALT THICKNESS IS SHOWN. THE HEIGHT OF THE BARRIER RAIL AND ASPHALT THICKNESS VARIES WHILE THE TOP OF THE BARRIER RAIL FOLLOWS THE PROFILE OF THE GUTTERLINE. FOR RAIL HEIGHT DETAILS AND ASPHALT THICKNESS, SEE THE "VERTICAL CONCRETE BARRIER RAIL SECTION" DETAIL.

FIXED END

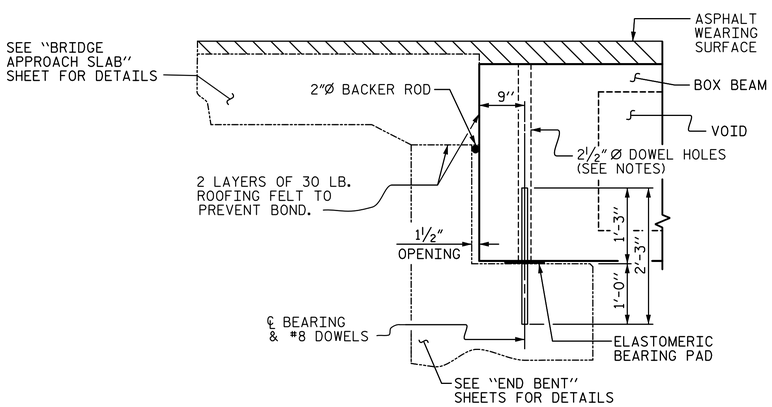

SECTION AT END BENT

FIXED END FIXED END

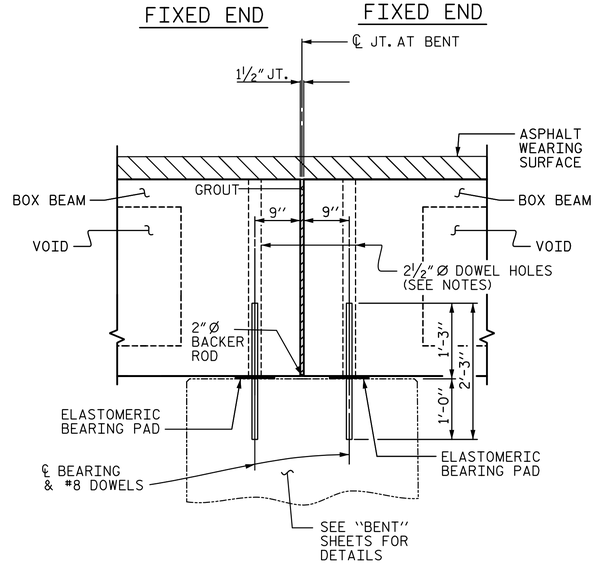

SECTION AT BENT

PERMITTED THREADED INSERT CAST IN OUTSIDE FACE OF EXTERIOR UNIT AND RECESSED ⅜". SIZE TO BE DETERMINED BY CONTRACTOR.

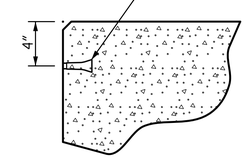

THREADED INSERT DETAIL

NOTES

ALL PRESTRESSING STRANDS SHALL BE 7-WIRE LOW RELAXATION GRADE 270 STRANDS AND SHALL CONFORM TO AASHTO M203 EXCEPT FOR SAMPLING REQUIREMENTS WHICH SHALL BE IN ACCORDANCE WITH THE STANDARD SPECIFICATIONS.

ALL REINFORCING STEEL CAST WITH THE BOX BEAM SECTIONS SHALL BE GRADE 60 AND SHALL BE INCLUDED IN THE UNIT PRICE BID FOR PRESTRESSED CONCRETE BOX BEAMS.

FLAME CUTTING OF THE TRANSVERSE POST-TENSIONING STRAND IS NOT ALLOWED.

RECESSES FOR TRANSVERSE STRANDS SHALL BE GROUTED AFTER THE TENSIONING OF THE STRANDS.

THE 2½" Ø DOWEL HOLES AT FIXED ENDS OF BOX BEAM SECTIONS SHALL BE FILLED WITH NON-SHRINK GROUT.

THE BACKER RODS SHALL CONFORM TO THE REQUIREMENTS OF TYPE M BOND BREAKER. SEE SECTION 1028 OF THE STANDARD SPECIFICATIONS.

THE TRANSFER OF LOAD FROM THE ANCHORAGES TO THE BOX BEAM UNIT SHALL BE DONE WHEN THE CONCRETE HAS REACHED A COMPRESSIVE STRENGTH OF NOT LESS THAN 4,000 PSI AND 5,500 PSI FOR SPANS A AND B RESPECTIVELY.

ALL REINFORCING STEEL IN VERTICAL CONCRETE BARRIER RAILS SHALL BE EPOXY COATED.

PRESTRESSING STRANDS SHALL BE CUT FLUSH WITH THE BOX BEAM UNIT ENDS.

APPLY EPOXY PROTECTIVE COATING TO BOX BEAM UNIT ENDS.

VERTICAL GROOVED CONTRACTION JOINTS, ½" IN DEPTH, SHALL BE TOOLED IN ALL EXPOSED FACES OF THE BARRIER RAIL AND IN ACCORDANCE WITH ARTICLE 825-10(B) OF THE STANDARD SPECIFICATIONS. A VERTICAL CONTRACTION JOINT SHALL BE LOCATED AT EACH THIRD POINT BETWEEN BARRIER RAIL EXPANSION JOINTS. ONLY ONE CONTRACTION JOINT IS REQUIRED AT MIDPOINT OF BARRIER RAIL SEGMENTS LESS THAN 20 FEET IN LENGTH AND NO CONTRACTION JOINTS ARE REQUIRED FOR THOSE SEGMENTS LESS THAN 10 FEET IN LENGTH.

THE LOCATION OF THE VOID DRAINS MAY BE SHIFTED SLIGHTLY WHERE NECESSARY TO CLEAR PRESTRESSING STRANDS OR TRANSVERSE REINFORCING STEEL.

FOR GROUT FOR STRUCTURES, SEE SPECIAL PROVISIONS.

THE PERMITTED THREADED INSERTS ARE DETAILED AS AN OPTION FOR THE CONTRACTOR TO ATTACH FALSEWORK AND FORMWORK DURING CONSTRUCTION.

THE PERMITTED THREADED INSERTS IN THE EXTERIOR UNITS SHALL BE SIZED BY THE CONTRACTOR, SPACED AT 4'-0" CENTERS AND GALVANIZED IN ACCORDANCE WITH SECTION 1076 OF THE STANDARD SPECIFICATIONS. STAINLESS STEEL THREADED INSERTS MAY BE USED AS AN ALTERNATE.

THE PERMITTED THREADED INSERTS SHALL BE GROUTED BY THE CONTRACTOR IMMEDIATELY FOLLOWING REMOVAL OF THE FALSEWORK.

THE COST OF THE PERMITTED THREADED INSERTS SHALL BE INCLUDED IN THE PRICE BID FOR THE PRECAST UNITS.

PROJECT NO. 17BP.12.R.62
CATAWBA COUNTY
STATION: 13+58.50 -L-

SHEET 1 OF 7

DOCUMENT NOT CONSIDERED FINAL UNLESS ALL SIGNATURES COMPLETED

DocuSigned by: Timothy J. Townsend B6D2B81FA7B02... NORTH CAROLINA PROFESSIONAL SEAL 34955 ENGINEER TIMOTHY J. TOWNSEND
9/17/2021

Mattern & Craig
ENGINEERS·SURVEYORS
12 BROAD STREET
ASHEVILLE, NORTH CAROLINA 28801
(828) 254-2201
FAX (828) 254-4562
NC LIC. NO. C-1154

STATE OF NORTH CAROLINA
DEPARTMENT OF TRANSPORTATION
RALEIGH

3'-0" X 3'-3"
PRESTRESSED CONCRET
BOX BEAM UNITS

REVISIONS								SHEET NO.
NO.	BY:	DATE:	NO.	BY:	DATE:			S-7
1			3					TOTAL SHEETS
2			4					26

DRAWN BY : CTM	DATE : 8-21	DESIGN ENGINEER OF RECORD: T. TOWNSEND	DATE : 9-21
CHECKED BY : TJT	DATE : 8-21		

DATE: 9/9/2021 TIME: 10:38:36 AM
FILE: I:\3790B - Div 12 Bridge 57 (Catawba Co)\Dwg\401.013.17BP.12.R.62_SMU_BB_007_170057.dgn

DocuSign Envelope ID: FE0A09D2-0CB7-40E3-97F8-CFD3D98BBBA1

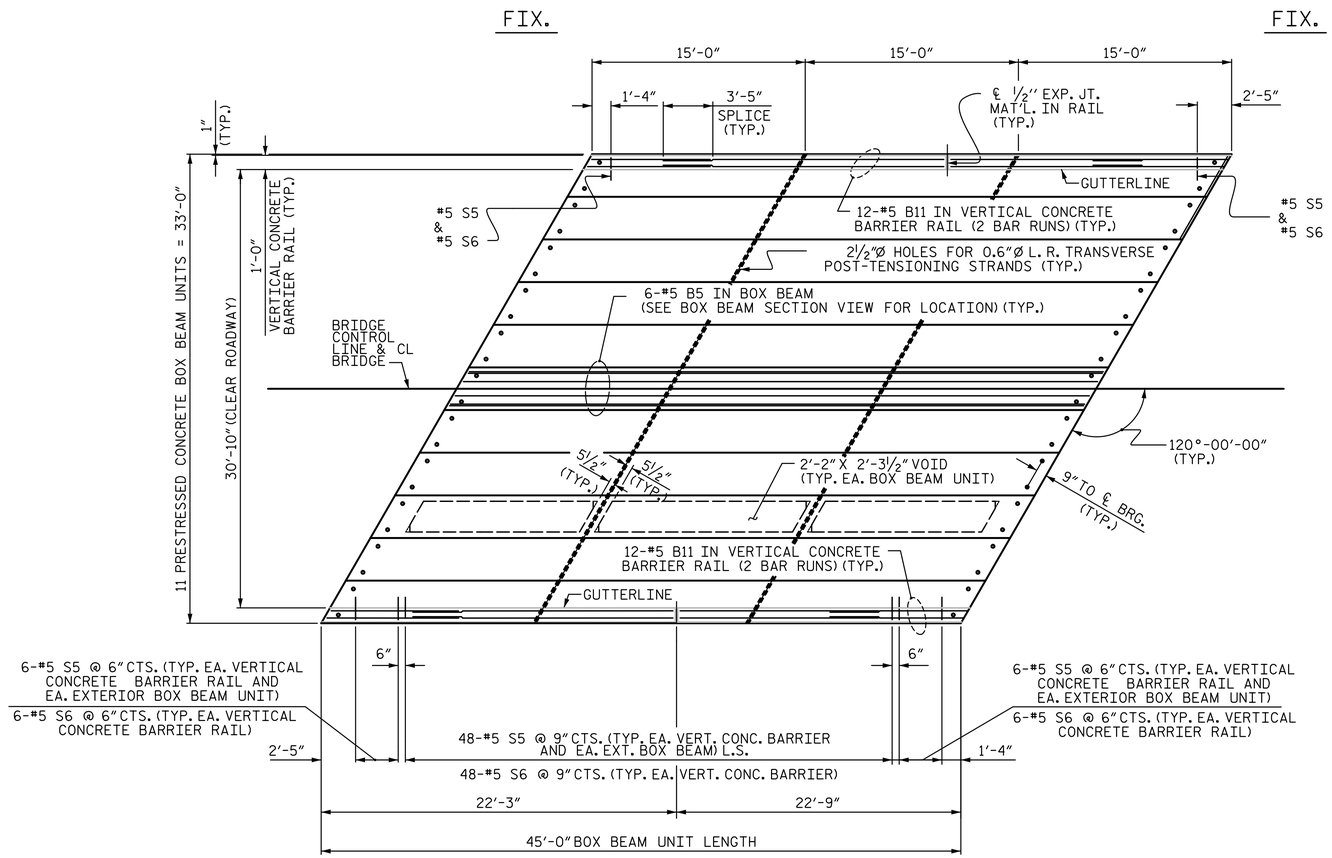

PLAN OF UNIT

BOX BEAM UNITS REQUIRED			
	NUMBER	LENGTH	TOTAL LENGTH
EXTERIOR B.B.	2	45'-0"	90'-0"
INTERIOR B.B.	9	45'-0"	405'-0"
TOTAL	11	———	495'-0"

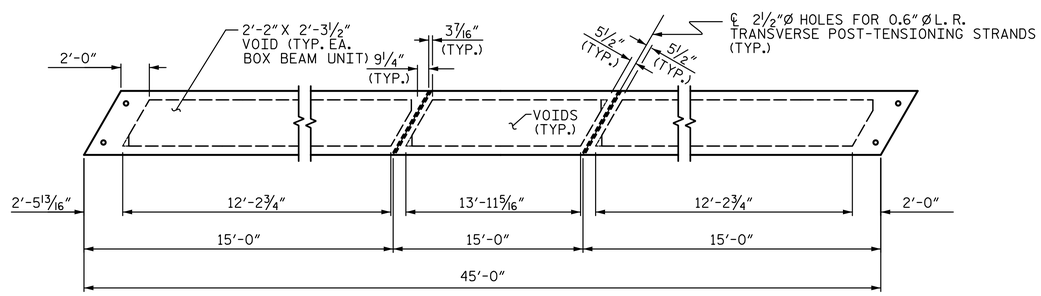

DIAPHRAGM AND VOID LAYOUT

PROJECT NO. 17BP.12.R.62

CATAWBA COUNTY

STATION: 13+58.50 -L-

SHEET 2 OF 7

DOCUMENT NOT CONSIDERED FINAL UNLESS ALL SIGNATURES COMPLETED

NORTH CAROLINA PROFESSIONAL SEAL 34955 ENGINEER TIMOTHY J. TOWNSEND

9/17/2021

Mattern & Craig
ENGINEERS·SURVEYORS
12 BROAD STREET
ASHEVILLE, NORTH CAROLINA 28801
(828) 254-2201
FAX (828) 254-4562
NC LIC. NO. C-1154

STATE OF NORTH CAROLINA
DEPARTMENT OF TRANSPORTATION
RALEIGH

3'-0" X 3'-3" PRESTRESSED CONCRETE BOX BEAM UNIT PLAN OF SPAN A

REVISIONS							SHEET NO.
NO.	BY:	DATE:	NO.	BY:	DATE:		S-8
1			3				TOTAL SHEETS
2			4				26

DRAWN BY : CTM	DATE : 8-21	DESIGN ENGINEER OF RECORD: T. TOWNSEND	DATE : 9-21
CHECKED BY : TJT	DATE : 8-21		

DATE: 9/9/2021 TIME: 10:38:40 AM
FILE: I:\3790B - Div 12 Bridge 57 (Catawba Co)\Dwg\401.015.17BP.12.R.62.SMU.BB.008.170057.dgn

DocuSign Envelope ID: FE0A09D2-0CB7-40E3-97F8-CFD3D98BBBA1

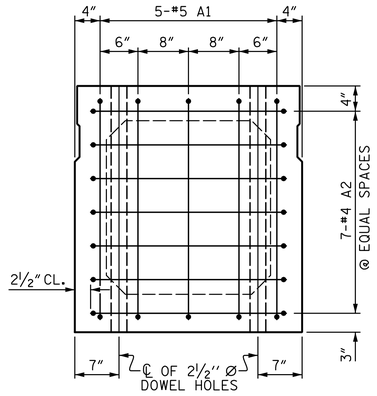

END ELEVATION

SHOWING PLACEMENT OF #5 & #4 "A" BARS AND LOCATION OF DOWEL HOLES. (INTERIOR BOX BEAM SECTION SHOWN-EXTERIOR SECTION SIMILAR EXCEPT SHEAR KEY LOCATION. STRAND LAYOUT NOT SHOWN.)

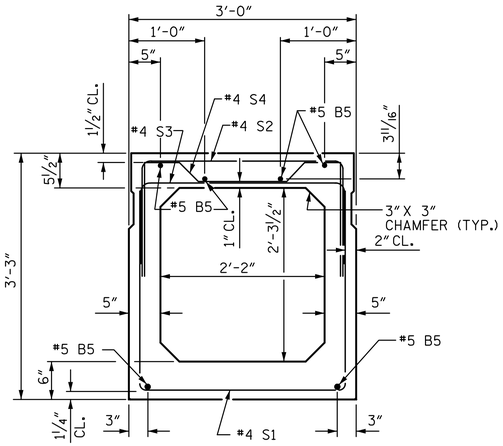

INTERIOR BOX BEAM SECTION

(STRAND LAYOUT NOT SHOWN)

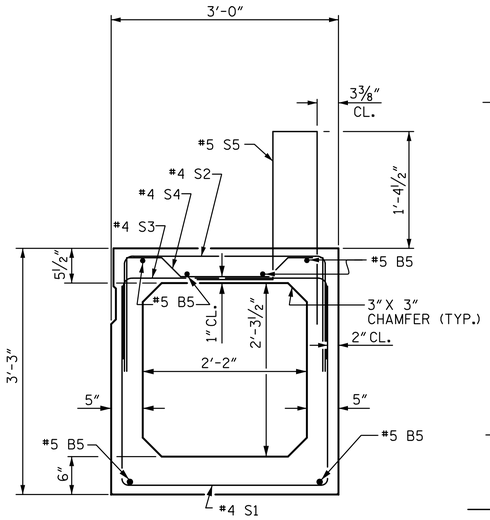

EXTERIOR BOX BEAM SECTION

(STRAND LAYOUT NOT SHOWN)

0.6" Ø LOW RELAXATION STRAND LAYOUT

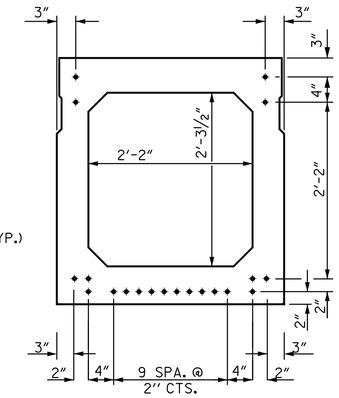

TYPICAL STRAND LOCATION

(20 STRANDS REQUIRED)

DEBONDING LEGEND

● FULLY BONDED STRANDS

BAR TYPES

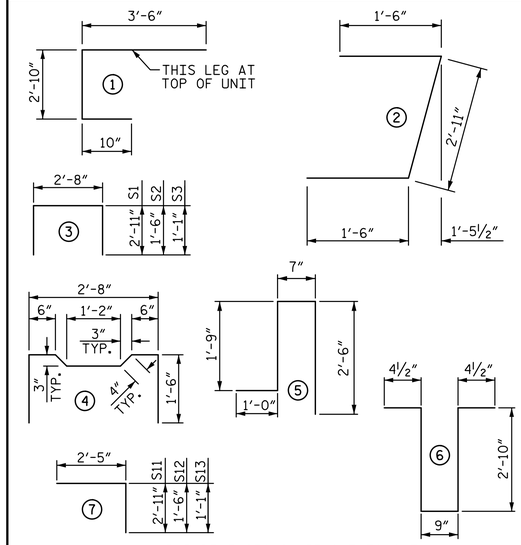

ALL BAR DIMENSIONS ARE OUT TO OUT

BILL OF MATERIAL FOR ONE BOX BEAM SECTION

				EXTERIOR UNIT		INTERIOR UNIT	
BAR	NUMBER	SIZE	TYPE	LENGTH	WEIGHT	LENGTH	WEIGHT
A1	10	#5	1	7'-2"	75	7'-2"	75
A2	26	#4	2	5'-11"	103	5'-11"	103
B5	6	#5	STR	44'-6"	278	44'-6"	278
K1	6	#4	6	7'-2"	29	7'-2"	29
K2	4	#4	STR	2'-10"	8	2'-10"	8
S1	40	#4	3	8'-6"	227	8'-6"	227
S2	40	#4	3	5'-8"	151	5'-8"	151
S3	61	#4	3	4'-10"	197	4'-10"	197
S4	21	#4	4	5'-10"	82	5'-10"	82
S11	32	#4	7	5'-4"	114	5'-4"	114
S12	32	#4	7	3'-11"	84	3'-11"	84
S13	32	#4	7	3'-6"	75	3'-6"	75
✳ S5	60	#5	5	5'-10"	365	--	--
REINFORCING STEEL					1,423 LBS.		1,423 LBS.
✳ EPOXY COATED REINF. STEEL					365 LBS.		
5000 P.S.I. CONCRETE				9.2	CU. YDS.	9.1	CU. YDS.
0.6" Ø L.R. STRANDS				No.	20	No.	20

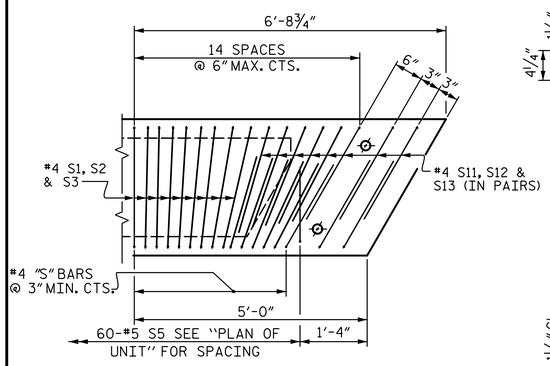

DETAIL "B"

EXTERIOR UNIT SHOWN, INTERIOR UNIT SIMILAR EXCEPT OMIT #5 S5 BARS. "B" BARS AND "A" BARS NOT SHOWN.

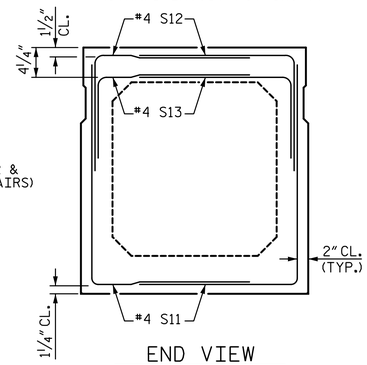

END VIEW

(SHOWING #4 "S" BARS IN END OF BEAM)

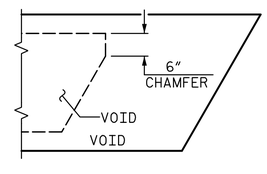

CHAMFER DETAIL

SHOWING 6" VOID CHAMFER

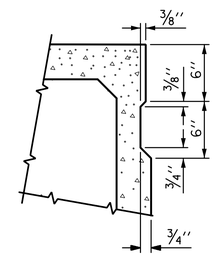

SHEAR KEY DETAIL

NOTE: OMIT SHEAR KEY ON OUTSIDE FACE OF EXTERIOR BOX BEAMS.

GRADE 270 STRANDS	
	0.6" Ø L.R.
AREA (SQUARE INCHES)	0.217
ULTIMATE STRENGTH (LBS. PER STRAND)	58,600
APPLIED PRESTRESS (LBS. PER STRAND)	43,950

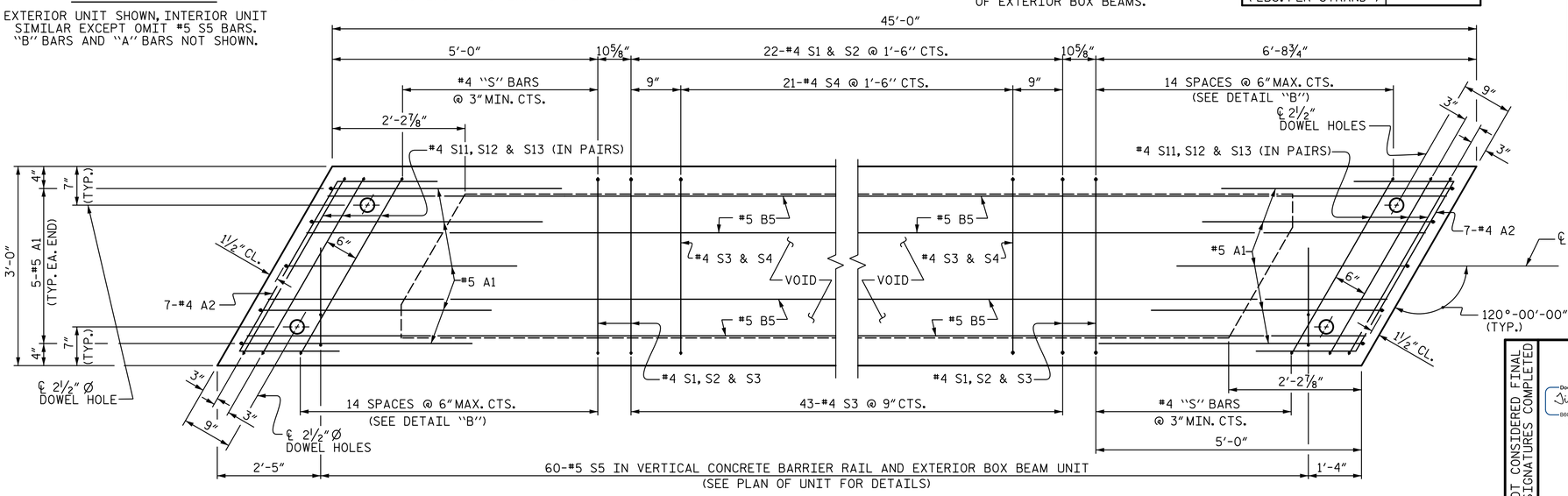

PLAN OF BOX BEAM

EXTERIOR UNIT SHOWN, INTERIOR UNIT SIMILAR EXCEPT OMIT #5 S5 BARS.
FOR LOCATION OF DIAPHRAGMS, SEE "PLAN OF UNIT".
FOR THREADED INSERTS, SEE "THREADED INSERT DETAIL".
FOR REINFORCING STEEL IN DIAPHRAGMS, SEE "DOUBLE DIAPHRAGM DETAILS".

PROJECT NO. 17BP.12.R.62
CATAWBA COUNTY
STATION: 13+58.50 -L-

SHEET 3 OF 7

DOCUMENT NOT CONSIDERED FINAL UNLESS ALL SIGNATURES COMPLETED

NORTH CAROLINA PROFESSIONAL SEAL 34955 ENGINEER TIMOTHY J. TOWNSEND
DocuSigned by: Timothy J. Townsend
9/17/2021

Mattern & Craig
ENGINEERS·SURVEYORS
12 BROAD STREET
ASHEVILLE, NORTH CAROLINA 28801
(828) 254-2201
FAX (828) 254-4562
NC LIC. NO. C-1154

STATE OF NORTH CAROLINA
DEPARTMENT OF TRANSPORTATION
RALEIGH

3'-0" X 3'-3" PRESTRESSED CONCRETE BOX BEAM UNIT SPAN A DETAILS

REVISIONS						
NO.	BY:	DATE:	NO.	BY:	DATE:	
1			3			
2			4			

SHEET NO. S-9
TOTAL SHEETS 26

DRAWN BY : CTM	DATE : 8-21	DESIGN ENGINEER OF RECORD: T. TOWNSEND	DATE : 9-21
CHECKED BY : TJT	DATE : 8-21		

DATE: 9/9/2021 TIME: 10:38:45 AM
FILE: I:\3790B - Div 12 Bridge 57 (Catawba Co)\Dwg\401.017.17BP.12.R.62_SMU_BB_009_170057.dgn

DocuSign Envelope ID: FE0A09D2-0CB7-40E3-97F8-CFD3D98BBBA1

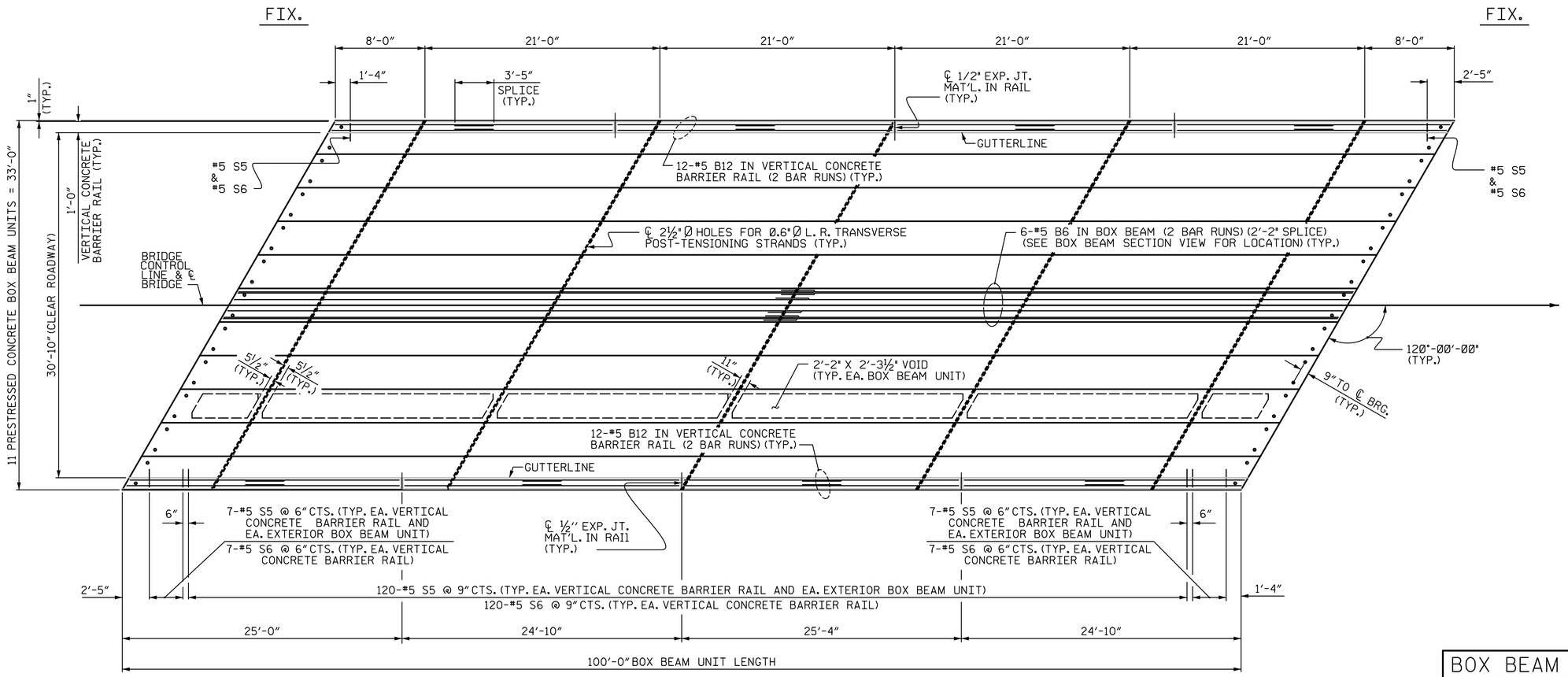

PLAN OF UNIT

BOX BEAM UNITS REQUIRED			
	NUMBER	LENGTH	TOTAL LENGTH
EXTERIOR B.B.	2	100'-0"	200'-0"
INTERIOR B.B.	9	100'-0"	900'-0"
TOTAL	11	———	1100'-0"

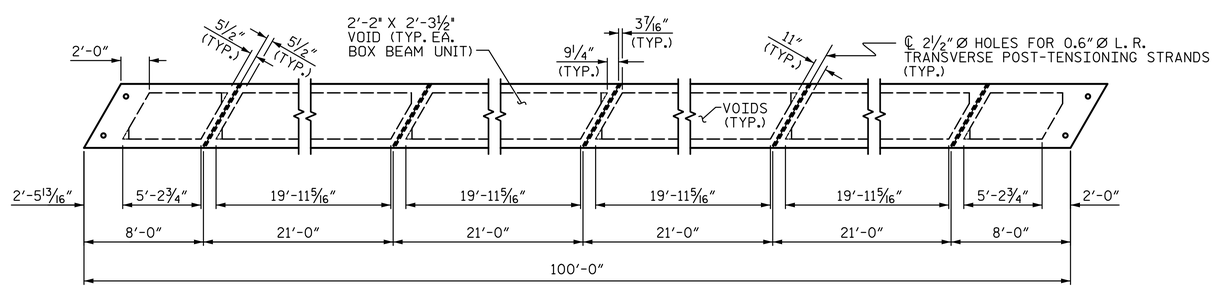

DIAPHRAGM AND VOID LAYOUT

PROJECT NO. 17BP.12.R.62

CATAWBA COUNTY

STATION: 13+58.50 -L-

SHEET 4 OF 7

DOCUMENT NOT CONSIDERED FINAL UNLESS ALL SIGNATURES COMPLETED

NORTH CAROLINA PROFESSIONAL SEAL 34955 ENGINEER TIMOTHY J. TOWNSEND
DocuSigned by: Timothy J. Townsend
B602B817A7E2402...
9/17/2021

Mattern & Craig
ENGINEERS·SURVEYORS
12 BROAD STREET
ASHEVILLE, NORTH CAROLINA 28801
(828) 254-2201
FAX (828) 254-4562
NC LIC. NO. C-1154

STATE OF NORTH CAROLINA
DEPARTMENT OF TRANSPORTATION
RALEIGH

3'-0" X 3'-3" PRESTRESSED CONCRETE BOX BEAM UNIT PLAN OF SPAN B

REVISIONS						
NO.	BY:	DATE:	NO.	BY:	DATE:	
1			3			
2			4			

SHEET NO. S-10

TOTAL SHEETS 26

DRAWN BY : CTM	DATE : 8-21	DESIGN ENGINEER OF RECORD: T. TOWNSEND	DATE : 9-21
CHECKED BY : TJT	DATE : 8-21		

DATE: 9/9/2021 TIME: 10:38:49 AM
FILE: I:\3790B - Div 12 Bridge 57 (Catawba Co)\Dwg\401.019.17BP.12.R.62_SMU_BB.010_170057.dgn

DocuSign Envelope ID: FE0A09D2-0CB7-40E3-97F8-CFD3D98BBBA1

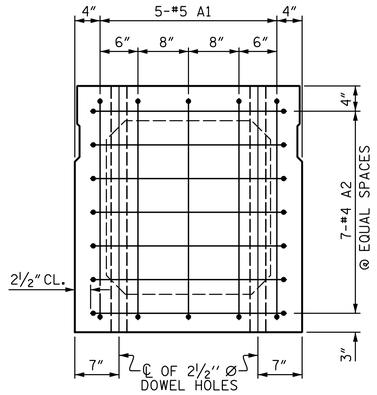

END ELEVATION

SHOWING PLACEMENT OF #5 & #4 "A" BARS AND LOCATION OF DOWEL HOLES. (INTERIOR BOX BEAM SECTION SHOWN-EXTERIOR SECTION SIMILAR EXCEPT SHEAR KEY LOCATION. STRAND LAYOUT NOT SHOWN.)

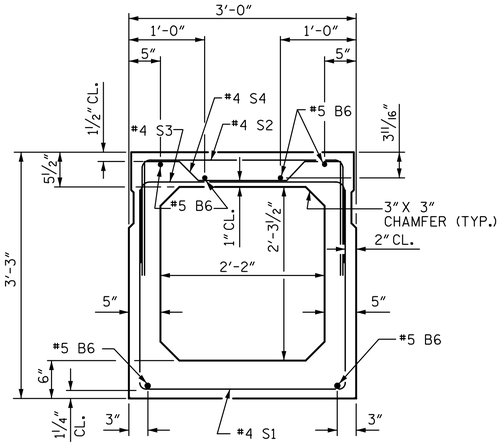

INTERIOR BOX BEAM SECTION

(STRAND LAYOUT NOT SHOWN)

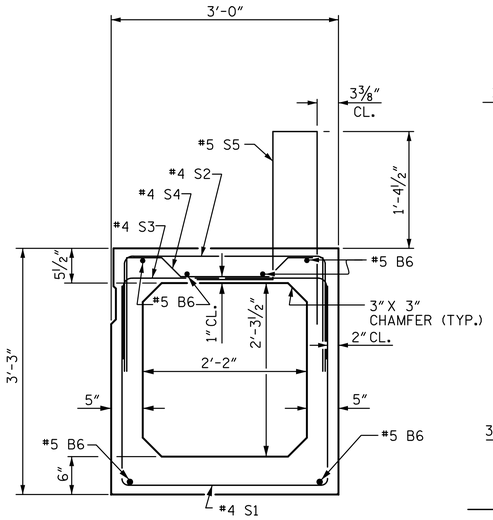

EXTERIOR BOX BEAM SECTION

(STRAND LAYOUT NOT SHOWN)

0.6" Ø LOW RELAXATION STRAND LAYOUT

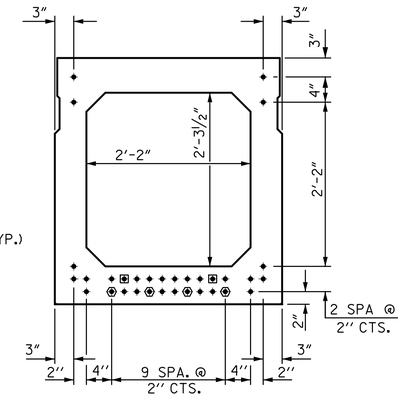

TYPICAL STRAND LOCATION

(32 STRANDS REQUIRED)

DEBONDING LEGEND

- ● FULLY BONDED STRANDS
- ◉ STRANDS DEBONDED FOR 4'-0" FROM END OF GIRDER
- ⬢ STRANDS DEBONDED FOR 12'-0" FROM END OF GIRDER

BOND SHALL BE BROKEN ON STRANDS AS SHOWN FOR THE SPECIFIED LENGTH FROM EACH END OF THE BOX BEAM. SEE STANDARD SPECIFICATIONS ARTICLE 1078-7.

BAR TYPES

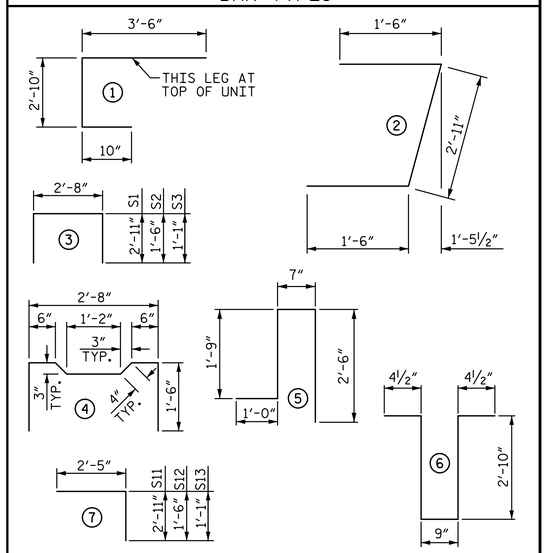

ALL BAR DIMENSIONS ARE OUT TO OUT

BILL OF MATERIAL FOR ONE BOX BEAM SECTION

				EXTERIOR UNIT		INTERIOR UNIT	
BAR	NUMBER	SIZE	TYPE	LENGTH	WEIGHT	LENGTH	WEIGHT
A1	10	#5	1	7'-2"	75	7'-2"	75
A2	44	#4	2	5'-11"	174	5'-11"	174
B6	12	#5	STR	50'-11"	637	50'-11"	637
K1	15	#4	6	7'-2"	72	7'-2"	72
K2	10	#4	STR	2'-10"	19	2'-10"	19
S1	77	#4	3	8'-6"	437	8'-6"	437
S2	77	#4	3	5'-8"	291	5'-8"	291
S3	135	#4	3	4'-10"	436	4'-10"	436
S4	58	#4	4	5'-10"	226	5'-10"	226
S11	32	#4	7	5'-4"	114	5'-4"	114
S12	32	#4	7	3'-11"	84	3'-11"	84
S13	32	#4	7	3'-6"	75	3'-6"	75
✳ S5	134	#5	5	5'-10"	815	--	--
REINFORCING STEEL					2640 LBS.		2640 LBS.
✳ EPOXY COATED REINF. STEEL					815 LBS.		
7500 P.S.I. CONCRETE				19.7	CU. YDS.	19.6	CU. YDS.
0.6" Ø L.R. STRANDS				No.	32	No.	32

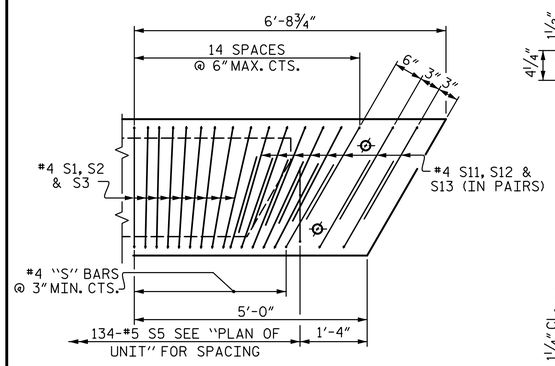

DETAIL "B"

EXTERIOR UNIT SHOWN, INTERIOR UNIT SIMILAR EXCEPT OMIT #5 S5 BARS. "B" BARS AND "A" BARS NOT SHOWN.

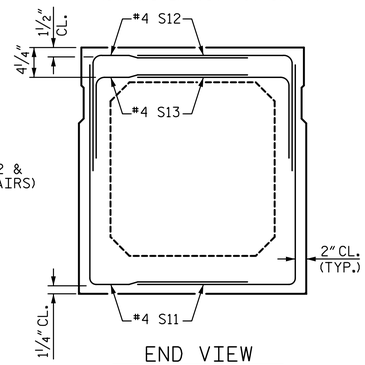

END VIEW

(SHOWING #4 "S" BARS IN END OF BEAM)

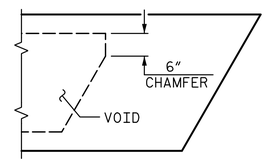

CHAMFER DETAIL

SHOWING 6" VOID CHAMFER

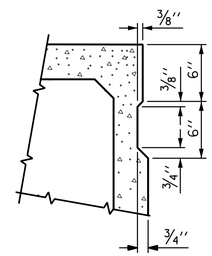

SHEAR KEY DETAIL

NOTE: OMIT SHEAR KEY ON OUTSIDE FACE OF EXTERIOR BOX BEAMS.

GRADE 270 STRANDS

	0.6" Ø L.R.
AREA (SQUARE INCHES)	0.217
ULTIMATE STRENGTH (LBS. PER STRAND)	58,600
APPLIED PRESTRESS (LBS. PER STRAND)	43,950

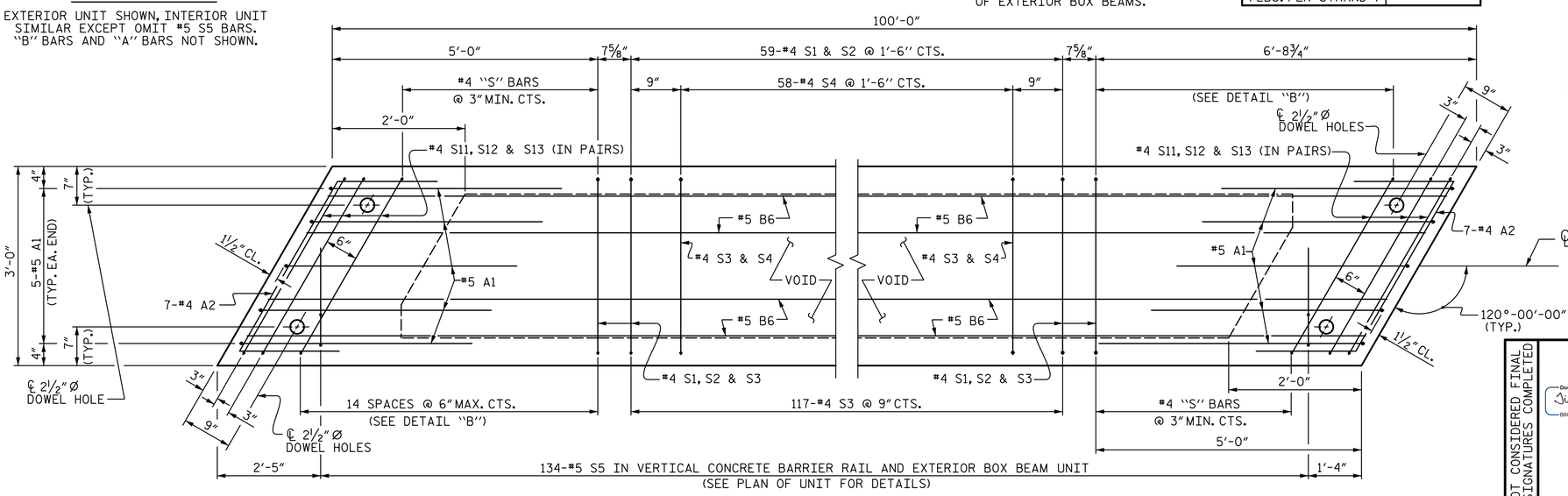

PLAN OF BOX BEAM

EXTERIOR UNIT SHOWN, INTERIOR UNIT SIMILAR EXCEPT OMIT #5 S5 BARS.
FOR LOCATION OF DIAPHRAGMS, SEE "PLAN OF UNIT".
FOR THREADED INSERTS, SEE "THREADED INSERT DETAIL".
FOR REINFORCING STEEL IN DIAPHRAGMS, SEE "DOUBLE DIAPHRAGM DETAILS".

PROJECT NO. 17BP.12.R.62

CATAWBA COUNTY

STATION: 13+58.50 -L-

SHEET 5 OF 7

DOCUMENT NOT CONSIDERED FINAL UNLESS ALL SIGNATURES COMPLETED

NORTH CAROLINA PROFESSIONAL SEAL 34955 ENGINEER TIMOTHY J. TOWNSEND
DocuSigned by: Timothy J. Townsend
9/17/2021

Mattern & Craig
ENGINEERS·SURVEYORS
12 BROAD STREET
ASHEVILLE, NORTH CAROLINA 28801
(828) 254-2201
FAX (828) 254-4562
NC LIC. NO. C-1154

STATE OF NORTH CAROLINA
DEPARTMENT OF TRANSPORTATION
RALEIGH

3'-0" X 3'-3" PRESTRESSED CONCRETE BOX BEAM UNIT SPAN B DETAILS

REVISIONS						
NO.	BY:	DATE:	NO.	BY:	DATE:	
1			3			
2			4			

SHEET NO. S-11

TOTAL SHEETS 26

DRAWN BY : CTM	DATE : 8-21	DESIGN ENGINEER OF RECORD: T. TOWNSEND	DATE : 9-21
CHECKED BY : TJT	DATE : 8-21		

DATE: 9/9/2021 TIME: 10:38:53 AM
FILE: I:\3790B - Div 12 Bridge 57 (Catawba Co)\Dwg\401.021.17BP.12.R.62_SMU_BB_011.170057.dgn

DocuSign Envelope ID: FE0A09D2-0CB7-40E3-97F8-CFD3D98BBBA1

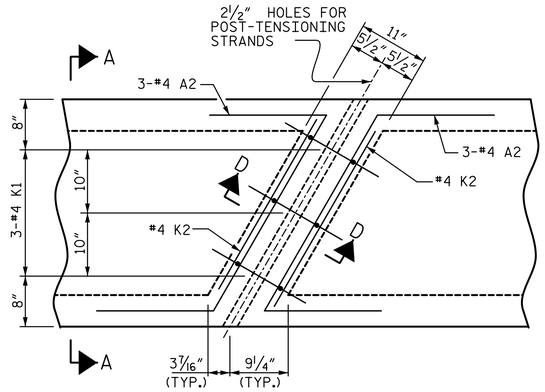

PLAN

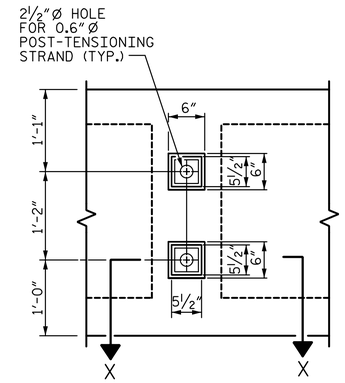

VIEW Y-Y

SHOWING ELEVATION VIEW OF GROUTED RECESS

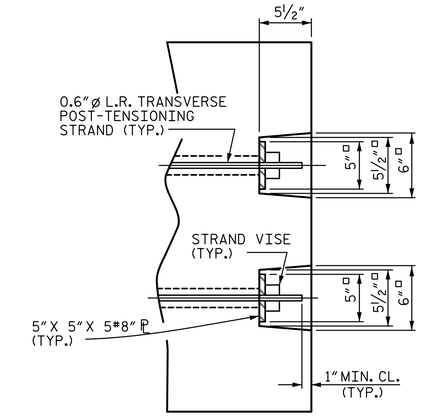

DETAIL "C"

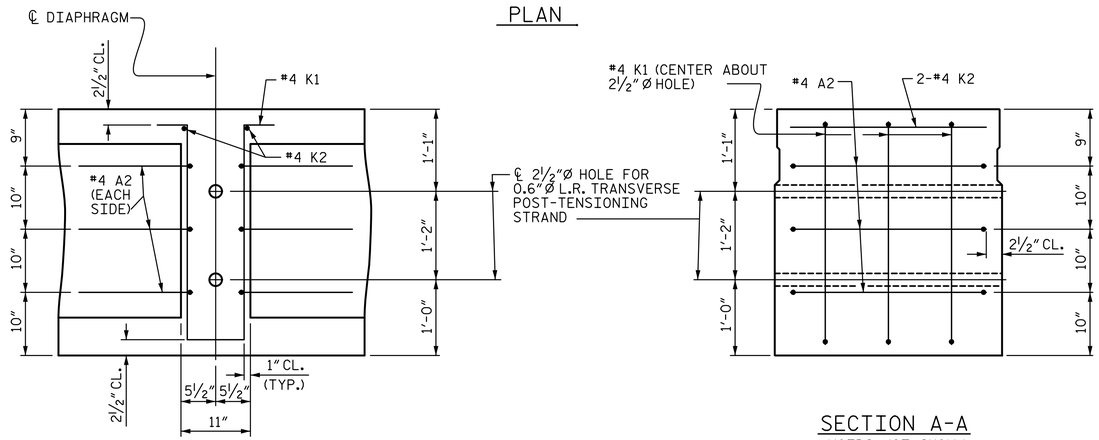

SECTION D-D

SECTION A-A

VOIDS NOT SHOWN

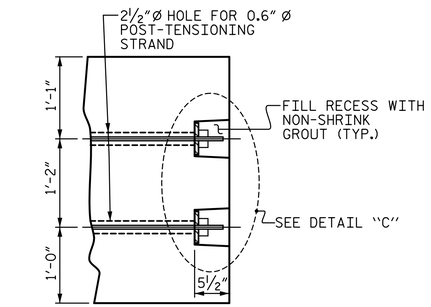

PART SECTION AT RECESS

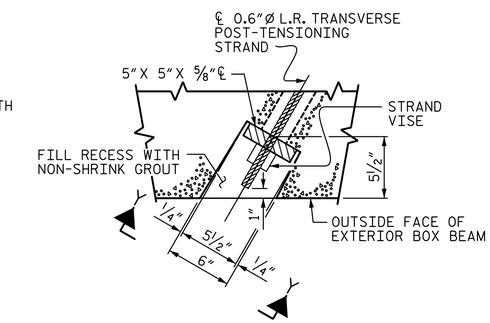

SECTION X-X

SHOWING PLAN VIEW OF GROUTED RECESS

GROUTED RECESS DETAIL AT END OF POST-TENSIONED STRANDS OF EXTERIOR BOX BEAM

DOUBLE DIAPHRAGM DETAILS

#4 "S" BARS NOT SHOWN. #4 "S" BARS MAY BE SHIFTED SLIGHTLY TO CLEAR 2½" ØHOLE.

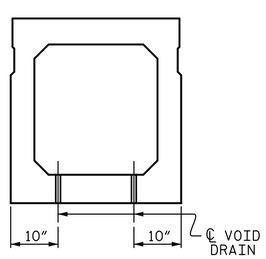

SECTION B-B

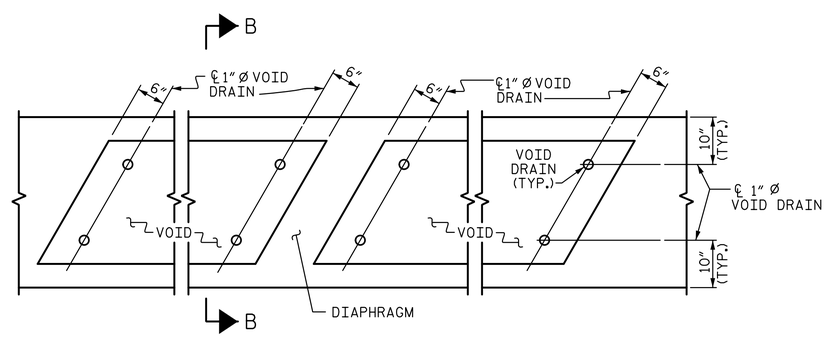

PART PLAN

VOID DRAIN DETAILS

(DIMENSIONS SHOWN ARE TYPICAL FOR EACH VOID)

DEAD LOAD DEFLECTION AND CAMBER	
	3'-0" x 3'-3"
45' BOX BEAM UNIT (SE)	0.6"Ø L.R. STRAND
CAMBER (SLAB ALONE IN PLACE)	11/16" ↑
DEFLECTION DUE TO SUPERIMPOSED DEAD LOAD**	1/16" ↓
FINAL CAMBER	5/8" ↑

** INCLUDES FUTURE WEARING SURFACE

DEAD LOAD DEFLECTION AND CAMBER	
	3'-0" x 3'-3"
100' BOX BEAM UNIT (SE)	0.6"Ø L.R. STRAND
CAMBER (SLAB ALONE IN PLACE)	2" ↑
DEFLECTION DUE TO SUPERIMPOSED DEAD LOAD**	7/8" ↓
FINAL CAMBER	1 1/8" ↑

** INCLUDES FUTURE WEARING SURFACE

PROJECT NO. 17BP.12.R.62

CATAWBA COUNTY

STATION: 13+58.50 -L-

SHEET 6 OF 7

DOCUMENT NOT CONSIDERED FINAL UNLESS ALL SIGNATURES COMPLETED

NORTH CAROLINA PROFESSIONAL SEAL 34955 ENGINEER TIMOTHY J. TOWNSEND

DocuSigned by: Timothy J. Townsend 9/17/2021

Mattern & Craig
ENGINEERS·SURVEYORS
12 BROAD STREET
ASHEVILLE, NORTH CAROLINA 28801
(828) 254-2201
FAX (828) 254-4562
NC LIC. NO. C-1154

STATE OF NORTH CAROLINA
DEPARTMENT OF TRANSPORTATION
RALEIGH

3'-0" X 3'-3"
PRESTRESSED CONCRETE
BOX BEAM UNIT
DETAILS

REVISIONS								SHEET NO.
NO.	BY:	DATE:	NO.	BY:	DATE:			S-12
1			3					TOTAL SHEETS
2			4					26

DRAWN BY : CTM	DATE : 8-21	DESIGN ENGINEER OF RECORD: T. TOWNSEND	DATE : 9-21
CHECKED BY : TJT	DATE : 8-21		

DATE: 9/9/2021 TIME: 10:38:57 AM
FILE: I:\3790B - Div 12 Bridge 57 (Catawba Co)\Dwg\401_023_17BP.12.R.62_SMU_BB_012_170057.dgn

DocuSign Envelope ID: FE0A09D2-0CB7-40E3-97F8-CFD3D98BBBA1

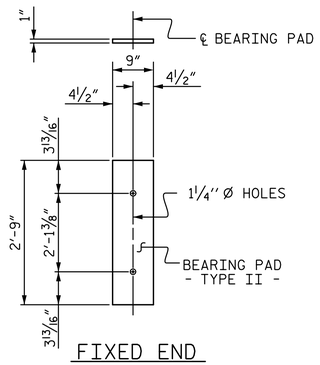

FIXED END
(TYPE II - 44 REQ'D)

ELASTOMERIC BEARING DETAILS

ELASTOMER IN ALL BEARINGS SHALL BE 60 DUROMETER HARDNESS.

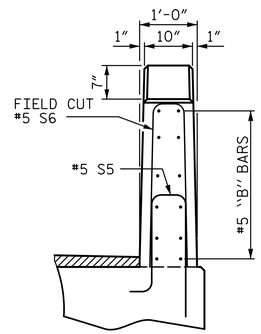

END VIEW

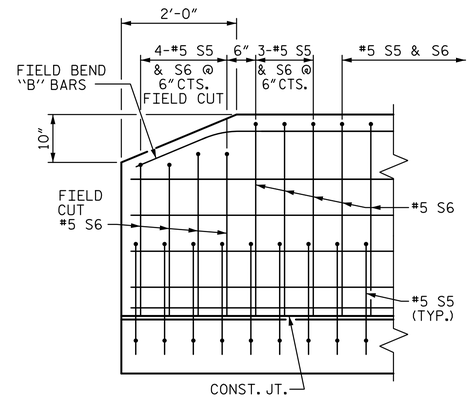

SIDE VIEW

END OF RAIL DETAILS

(LOCATED AT END BENT 1 AND END BENT 2 ONLY)

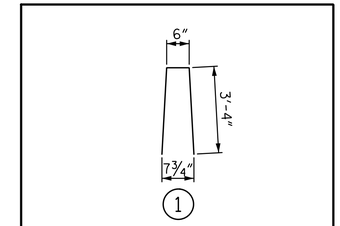

BAR TYPE

BAR DIMENSIONS ARE OUT TO OUT

BILL OF MATERIAL FOR VERTICAL CONCRETE BARRIER RAIL

BAR	BARS PER PAIR OF EXTERIOR UNITS	SIZE	TYPE	LENGTH	WEIGHT
	45' UNIT				
✳B11	96	#5	STR	13'-2"	1318
✳S6	120	#5	1	7'-2"	897
✳EPOXY COATED REINFORCING STEEL			LBS.		2215
CLASS AA CONCRETE			CU.YDS.		11.7
TOTAL VERTICAL CONCRETE BARRIER RAIL			LN. FT.		90.0

BILL OF MATERIAL FOR VERTICAL CONCRETE BARRIER RAIL

BAR	BARS PER PAIR OF EXTERIOR UNITS	SIZE	TYPE	LENGTH	WEIGHT
	100' UNIT				
✳B12	192	#5	STR	14'-3"	2854
✳S6	268	#5	1	7'-2"	2003
✳EPOXY COATED REINFORCING STEEL			LBS.		4857
CLASS AA CONCRETE			CU.YDS.		25.9
TOTAL VERTICAL CONCRETE BARRIER RAIL			LN. FT.		200.0

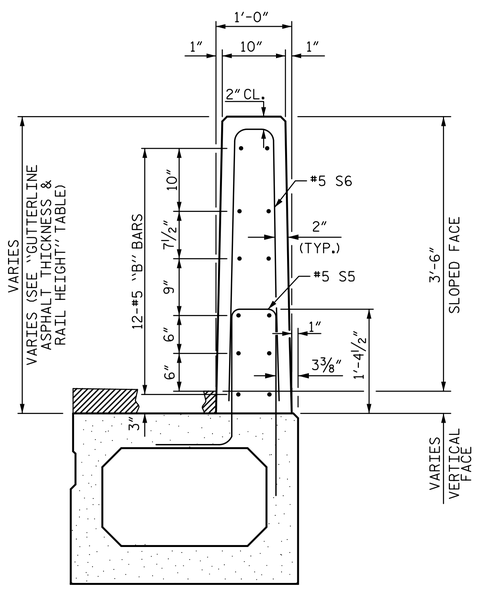

SECTION THRU RAIL

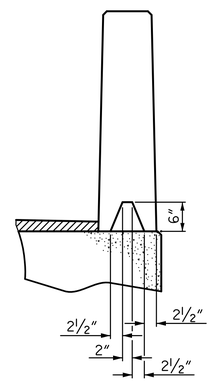

SECTION S-S
AT DAM IN OPEN JOINT
(THIS IS TO BE USED ONLY
WHEN SLIP FORM IS USED)

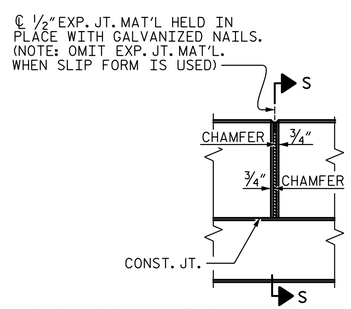

ELEVATION AT EXPANSION JOINTS

VERTICAL CONCRETE BARRIER RAIL DETAILS

GUTTERLINE ASPHALT THICKNESS & RAIL HEIGHT

SPAN	GUTTERLINE	ASPHALT OVERLAY THICKNESS			RAIL HEIGHT		
		BEGIN BRG.	@ MID-SPAN	END BRG.	BEGIN BRG.	@ MID-SPAN	END BRG.
A	LEFT	3"	2⅜"	3¼"	3'-9"	3'-8⅜"	3'-9¼"
	RIGHT	4"	3 1/16"	3¾"	3'-10"	3'-9 1/16"	3'-9¾"
B	LEFT	3¼"	1 9/16"	3⅝"	3'-9¼"	3'-7 9/16"	3'-9⅝"
	RIGHT	3¾"	1⅝"	3⅜"	3'-9¾"	3'-7⅝"	3'-9⅜"

PROJECT NO. 17BP.12.R.62

CATAWBA COUNTY

STATION: 13+58.50 -L-

SHEET 7 OF 7

DOCUMENT NOT CONSIDERED FINAL UNLESS ALL SIGNATURES COMPLETED

DocuSigned by: Timothy J. Townsend
DocuSign Envelope ID: FE0A09D2-0CB7-40E3-97F8-CFD3D98BBBA1
NORTH CAROLINA PROFESSIONAL SEAL 34955 ENGINEER TIMOTHY J. TOWNSEND
9/17/2021

Mattern & Craig
ENGINEERS·SURVEYORS
12 BROAD STREET
ASHEVILLE, NORTH CAROLINA 28801
(828) 254-2201
FAX (828) 254-4562
NC LIC. NO. C-1154

STATE OF NORTH CAROLINA
DEPARTMENT OF TRANSPORTATION
RALEIGH

3'-0" X 3'-3" PRESTRESSED CONCRETE BOX BEAM UNIT DETAILS

REVISIONS						SHEET NO.
NO.	BY:	DATE:	NO.	BY:	DATE:	S-13
1			3			TOTAL SHEETS
2			4			26

DRAWN BY : CTM	DATE : 8-21	DESIGN ENGINEER OF RECORD: T. TOWNSEND	DATE : 9-21
CHECKED BY : TJT	DATE : 8-21		

DATE: 9/9/2021 TIME: 10:39:02 AM
FILE: I:\3790B - Div 12 Bridge 57 (Catawba Co)\Dwg\401_025_17BP.12.R.62_SMU_BB_013_170057.dgn

DocuSign Envelope ID: FE0A09D2-0CB7-40E3-97F8-CFD3D98BBBA1

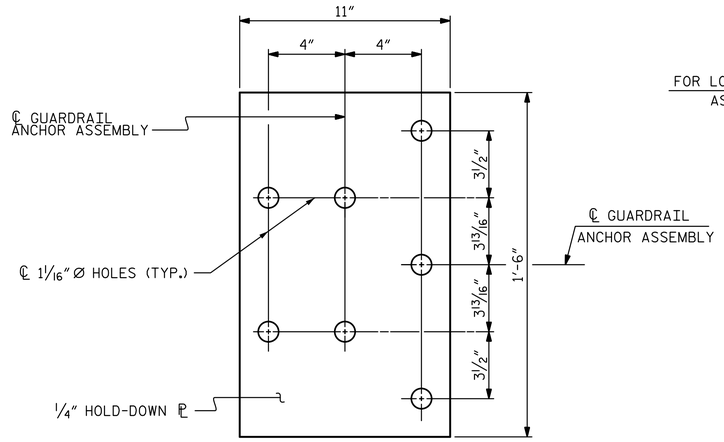

PLAN

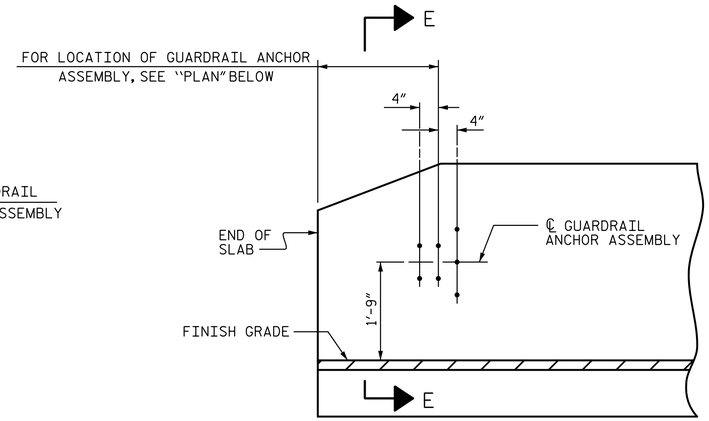

ELEVATION

NOTES

THE GUARDRAIL ANCHOR ASSEMBLY SHALL CONSIST OF A 1/4" HOLD DOWN PLATE AND 7 - 7/8" Ø BOLTS WITH NUTS AND WASHERS.

THE HOLD-DOWN PLATE SHALL CONFORM TO AASHTO M270 GRADE 36. AFTER FABRICATION, THE HOLD-DOWN PLATE SHALL BE HOT-DIP GALVANIZED IN ACCORDANCE WITH AASHTO M111.

BOLTS SHALL CONFORM TO THE REQUIREMENTS OF ASTM A307 AND NUTS SHALL CONFORM TO THE REQUIREMENTS OF AASHTO M291. BOLTS, NUTS AND WASHERS SHALL BE GALVANIZED. (AT THE CONTRACTOR'S OPTION, STAINLESS STEEL BOLTS, NUTS AND WASHERS MAY BE USED AS AN ALTERNATE FOR THE 7/8" Ø GALVANIZED BOLTS, NUTS AND WASHERS. THEY SHALL CONFORM TO OR EXCEED THE MECHANICAL REQUIREMENTS OF ASTM A307. THE USE OF THIS ALTERNATE SHALL BE APPROVED BY THE ENGINEER.)

THE GUARDRAIL ANCHOR ASSEMBLY IS REQUIRED AT ALL POINTS WHERE APPROACH GUARDRAIL IS TO BE ATTACHED TO THE END OF BARRIER RAIL. FOR POINTS OF ATTACHMENT, SEE SKETCH.

AFTER INSTALLATION, THE EXPOSED THREAD OF THE BOLT SHALL BE BURRED WITH A SHARP POINTED TOOL.

THE COST OF THE GUARDRAIL ANCHOR ASSEMBLY SHALL BE INCLUDED IN THE UNIT CONTRACT PRICE BID FOR VERTICAL CONCRETE BARRIER RAIL.

THE VERTICAL REINFORCING BARS MAY BE SHIFTED SLIGHTLY IN THE VERTICAL CONCRETE BARRIER RAIL TO CLEAR ASSEMBLY BOLTS.

THE 1 1/4" Ø HOLES SHALL BE FORMED OR DRILLED WITH A CORE BIT. IMPACT TOOLS WILL NOT BE PERMITTED. ANY CONCRETE DAMAGED BY THIS WORK SHALL BE REPAIRED TO THE SATISFACTION OF THE ENGINEER.

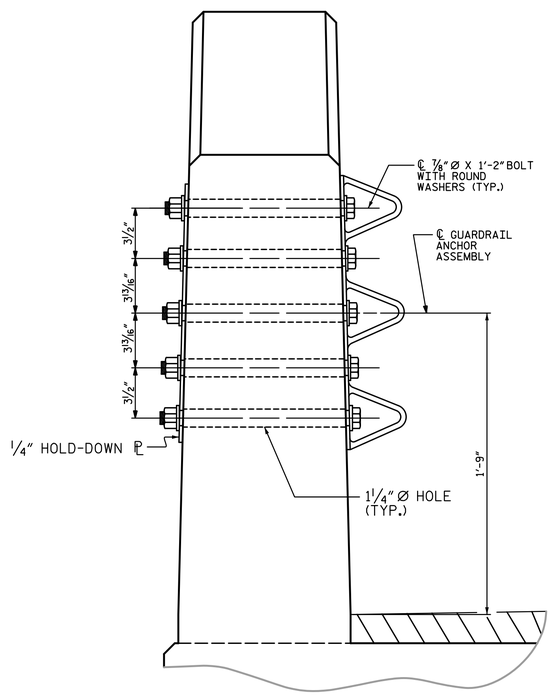

SECTION E-E

GUARDRAIL ANCHOR ASSEMBLY DETAILS

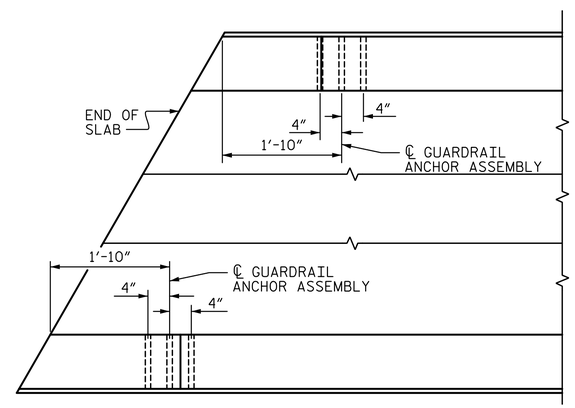

PLAN

LOCATION OF ANCHORS FOR GUARDRAIL

END BENT #1 SHOWN, END BENT #2 SIMILAR.

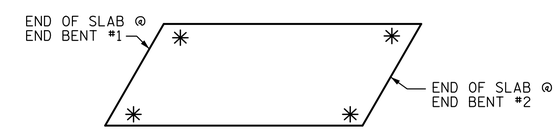

SKETCH SHOWING POINTS OF ATTACHMENT

✳ DENOTES GUARDRAIL ANCHOR ASSEMBLY

PROJECT NO. 17BP.12.R.62

CATAWBA COUNTY

STATION: 13+58.50 -L-

DOCUMENT NOT CONSIDERED FINAL UNLESS ALL SIGNATURES COMPLETED

NORTH CAROLINA PROFESSIONAL SEAL 34955 ENGINEER TIMOTHY J. TOWNSEND
DocuSigned by: Timothy J. Townsend
B6D2B81F4D4B2...
9/17/2021

Mattern & Craig
ENGINEERS·SURVEYORS
12 BROAD STREET
ASHEVILLE, NORTH CAROLINA 28801
(828) 254-2201
FAX (828) 254-4562
NC LIC. NO. C-1154

STATE OF NORTH CAROLINA
DEPARTMENT OF TRANSPORTATION
RALEIGH

GUARDRAIL ANCHORAGE DETAILS FOR VERTICAL CONCRETE BARRIER RAIL

REVISIONS						
NO.	BY:	DATE:	NO.	BY:	DATE:	
1			3			
2			4			

SHEET NO. S-14

TOTAL SHEETS 26

DRAWN BY : CTM	DATE : 8-21	DESIGN ENGINEER OF RECORD: T. TOWNSEND	DATE : 9-21
CHECKED BY : TJT	DATE : 8-21		

DATE: 9/9/2021 TIME: 10:39:05 AM
FILE: I:\3790B - Div 12 Bridge 57 (Catawba Co)\Dwg\401_027_17BP.12.R.62_SMU_GR_014_170057.dgn

DocuSign Envelope ID: FE0A09D2-0CB7-40E3-97F8-CFD3D98BBBA1

NOTES

STIRRUPS IN CAP MAY BE SHIFTED AS NECESSARY TO CLEAR DOWELS.

THE CONCRETE IN THE SHADED AREA OF THE WING SHALL BE POURED AFTER THE VERTICAL CONCRETE BARRIER RAIL IS CAST IF SLIP FORMING IS USED.

FOR PILE SPLICE DETAILS, SEE SHEET 3 OF 3.

FOR WING DETAILS, SEE SHEET 2 OF 3.

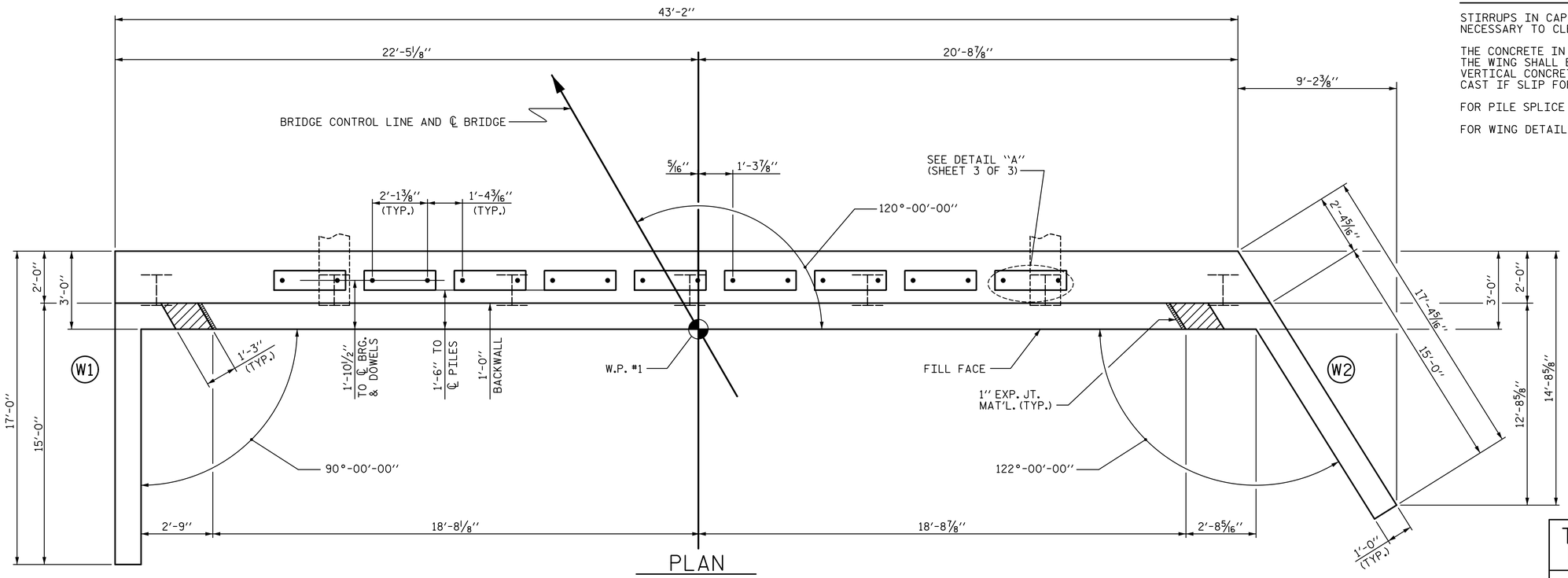

PLAN

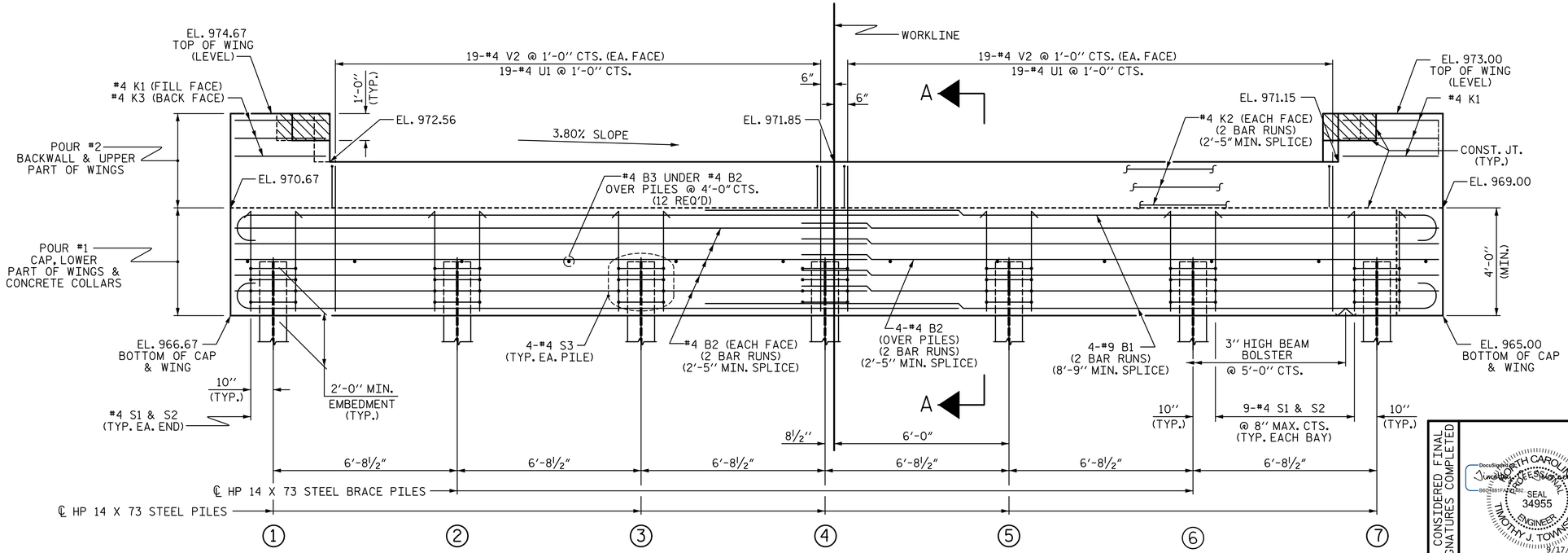

ELEVATION

WINGS NOT SHOWN FOR CLARITY.
FOR SECTION A-A, SEE SHEET 3 OF 3.

TOP OF PILE ELEVATIONS	
1	968.61
2	968.35
3	968.10
4	967.84
5	967.59
6	967.33
7	967.08

PROJECT NO. 17BP.12.R.62

CATAWBA COUNTY

STATION: 13+58.50 -L-

SHEET 1 OF 3

DRAWN BY : DKA DATE : 8-21

CHECKED BY : TJT DATE : 8-21

DESIGN ENGINEER OF RECORD: T. TOWNSEND DATE : 9-21

DOCUMENT NOT CONSIDERED FINAL UNLESS ALL SIGNATURES COMPLETED

NORTH CAROLINA PROFESSIONAL SEAL 34955 ENGINEER TIMOTHY J. TOWNSEND 9/17/2021

DocuSigned by: Timothy J. Townsend B02C8817A7E2402

Mattern & Craig
ENGINEERS·SURVEYORS
12 BROAD STREET
ASHEVILLE, NORTH CAROLINA 28801
(828) 254-2201
FAX (828) 254-4562
NC LIC. NO. C-1154

STATE OF NORTH CAROLINA
DEPARTMENT OF TRANSPORTATION
RALEIGH

SUBSTRUCTURE

END BENT 1
PLAN AND ELEVATION

REVISIONS						
NO.	BY:	DATE:	NO.	BY:	DATE:	
1			3			
2			4			

SHEET NO. S-15

TOTAL SHEETS 26

DATE: 9/9/2021 TIME: 10:39:09 AM
FILE: I:\3790B - Div 12 Bridge 57 (Catawba Co)\Dwg\401.029.17BP.12.R.62.SMU.E1.015.170057.dgn

DocuSign Envelope ID: FE0A09D2-0CB7-40E3-97F8-CFD3D98BBBA1

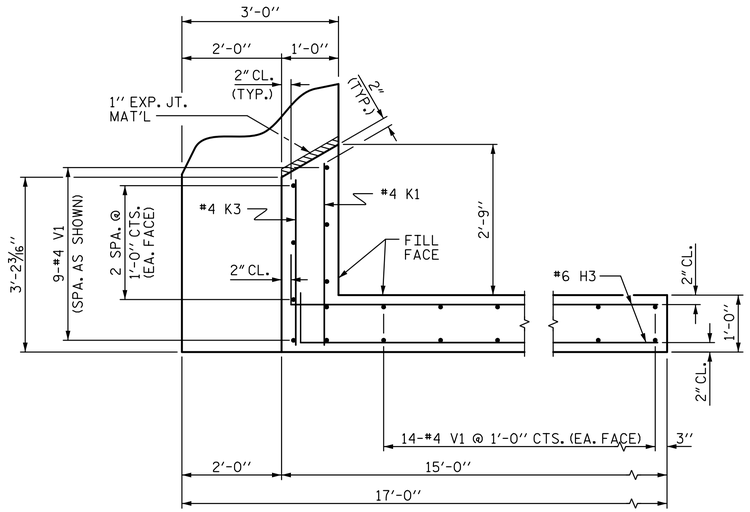

PLAN OF WING (W1)

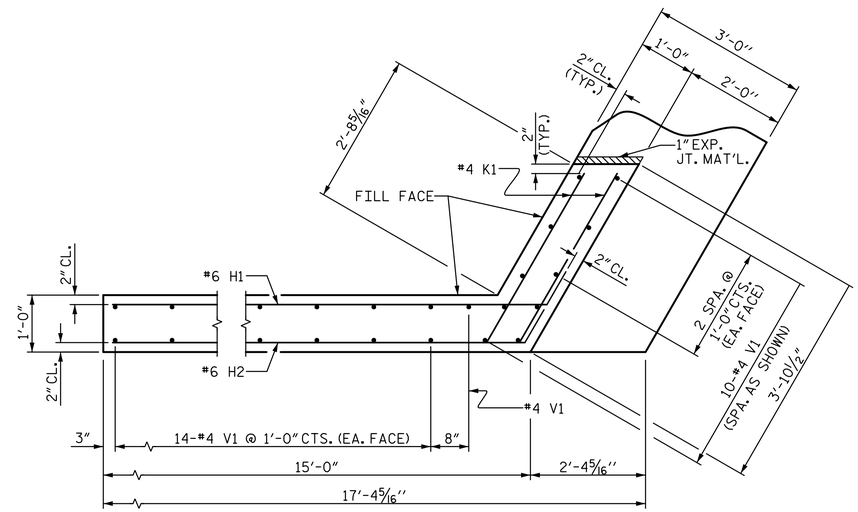

PLAN OF WING (W2)

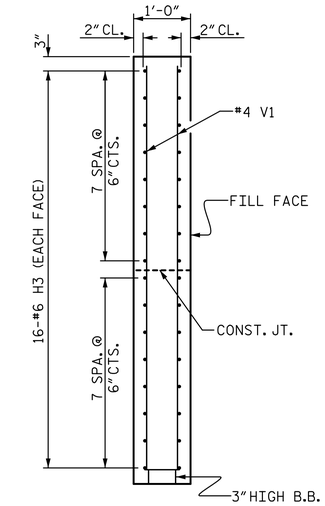

SECTION X-X

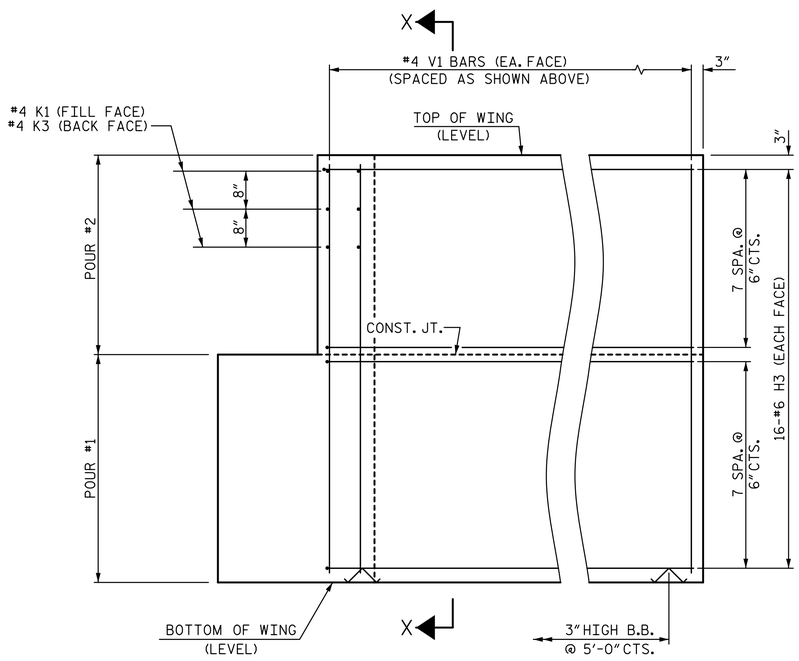

ELEVATION OF WING (W1)

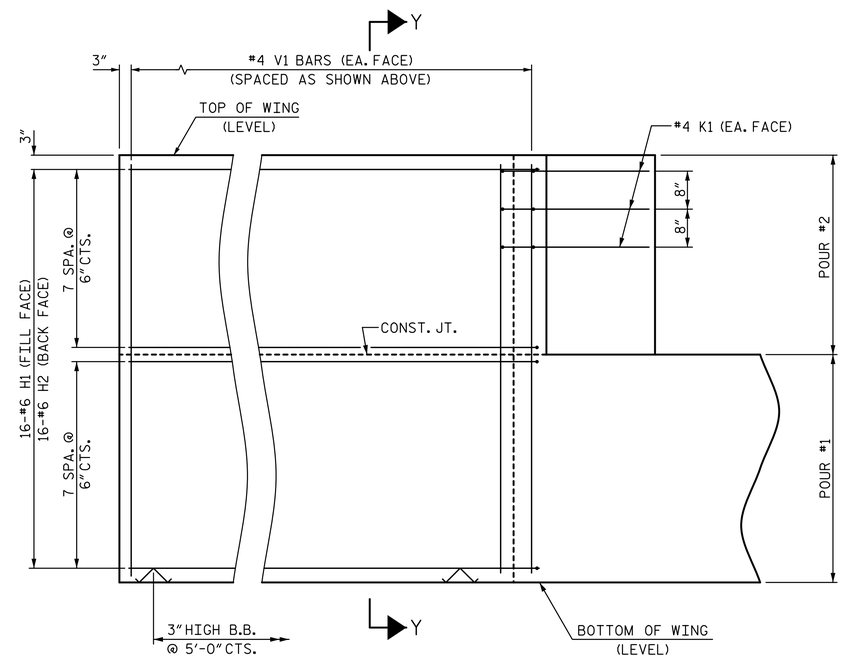

ELEVATION OF WING (W2)

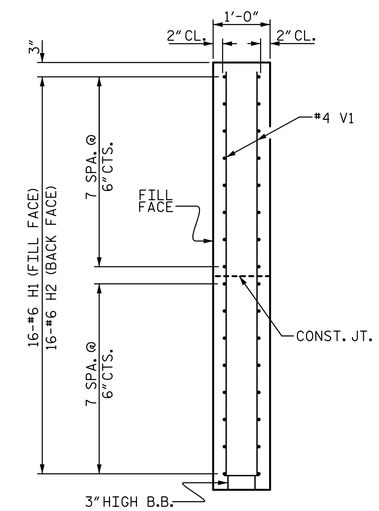

SECTION Y-Y

WING DETAILS

PROJECT NO. 17BP.12.R.62

CATAWBA COUNTY

STATION: 13+58.50 -L-

SHEET 2 OF 3

DOCUMENT NOT CONSIDERED FINAL UNLESS ALL SIGNATURES COMPLETED

NORTH CAROLINA PROFESSIONAL SEAL 34955 ENGINEER TIMOTHY J. TOWNSEND 9/17/2021

STATE OF NORTH CAROLINA
DEPARTMENT OF TRANSPORTATION
RALEIGH

SUBSTRUCTURE

END BENT 1
WING DETAILS

Mattern & Craig
ENGINEERS·SURVEYORS
12 BROAD STREET
ASHEVILLE, NORTH CAROLINA 28801
(828) 254-2201
FAX (828) 254-4562
NC LIC. NO. C-1154

REVISIONS							SHEET NO.
NO.	BY:	DATE:	NO.	BY:	DATE:		S-16
1			3				TOTAL SHEETS
2			4				26

DRAWN BY : DKA	DATE : 8-21	DESIGN ENGINEER OF RECORD: T. TOWNSEND	DATE : 9-21
CHECKED BY : TJT	DATE : 8-21		

DATE: 9/9/2021 TIME: 10:39:12 AM
FILE: I:\3790B - Div 12 Bridge 57 (Catawba Co)\Dwg\401.031.17BP.12.R.62_SMU_E1_016_170057.dgn

DocuSign Envelope ID: FE0A09D2-0CB7-40E3-97F8-CFD3D98BBBA1

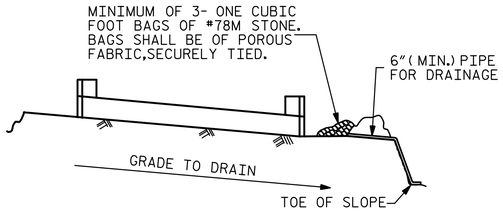

BAGGED STONE AND PIPE SHALL BE PLACED IMMEDIATELY AFTER COMPLETION OF END BENT EXCAVATION. PIPE MAY BE EITHER CONCRETE, CORRUGATED STEEL, CORRUGATED ALUMINUM ALLOY, OR CORRUGATED PLASTIC. PERFORATED PIPE WILL NOT BE ALLOWED.

BAGGED STONE SHALL REMAIN IN PLACE UNTIL THE ENGINEER DIRECTS THAT IT BE REMOVED. THE CONTRACTOR SHALL REMOVE AND DISPOSE OF SILT ACCUMULATIONS AT BAGGED STONE WHEN SO DIRECTED BY THE ENGINEER. BAGS SHALL BE REMOVED AND REPLACED WHENEVER THE ENGINEER DETERMINES THAT THEY HAVE DETERIORATED AND LOST THEIR EFFECTIVENESS.

NO SEPARATE PAYMENT WILL BE MADE FOR THIS WORK AND THE ENTIRE COST OF THIS WORK SHALL BE INCLUDED IN THE UNIT CONTRACT PRICE BID FOR THE SEVERAL PAY ITEMS.

TEMPORARY DRAINAGE AT END BENT

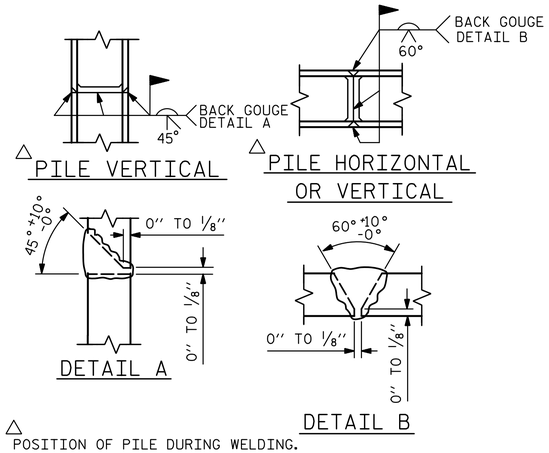

△ POSITION OF PILE DURING WELDING.

PILE SPLICE DETAILS

BAR TYPES

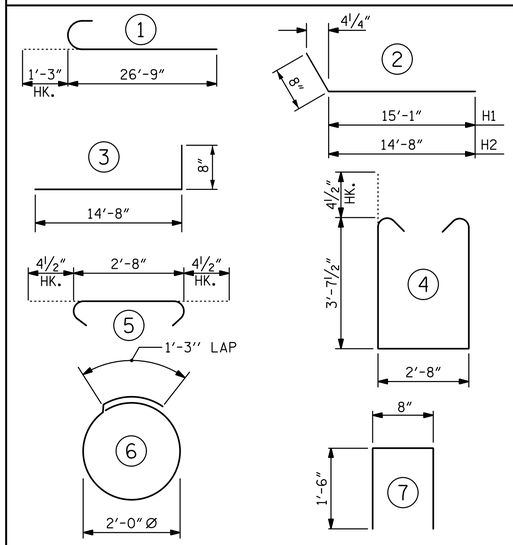

ALL BAR DIMENSIONS ARE OUT TO OUT.

BILL OF MATERIAL

BAR	NO.	SIZE	TYPE	LENGTH	WEIGHT
B1	16	#9	1	28'-0"	1523
B2	28	#4	STR	23'-6"	440
B3	12	#4	STR	2'-8"	21
D1	22	#8	STR	2'-3"	132
H1	16	#6	2	15'-9"	379
H2	16	#6	2	15'-4"	368
H3	32	#6	3	15'-4"	737
K1	9	#4	STR	3'-3"	20
K2	12	#4	STR	23'-6"	188
K3	3	#4	STR	2'-11"	6
S1	56	#4	4	10'-8"	399
S2	56	#4	5	3'-5"	128
S3	28	#4	6	7'-7"	142
U1	38	#4	7	3'-8"	93
V1	76	#4	STR	7'-8"	389
V2	76	#4	STR	5'-9"	292

REINFORCING STEEL 5257 LBS.

CLASS A CONCRETE BREAKDOWN

POUR #1	CAP, LOWER PART OF WINGS & COLLARS	25.2 C.Y.
POUR #2	BACKWALL & UPPER PART OF WINGS	8.5 C.Y.
TOTAL CLASS A CONCRETE		33.7 C.Y.

HP 14 X 73 STEEL PILES NO: 7
LIN. FT.= 225

PILE DRIVING EQUIPMENT SETUP FOR HP 14 X 73 STEEL PILES NO: 7

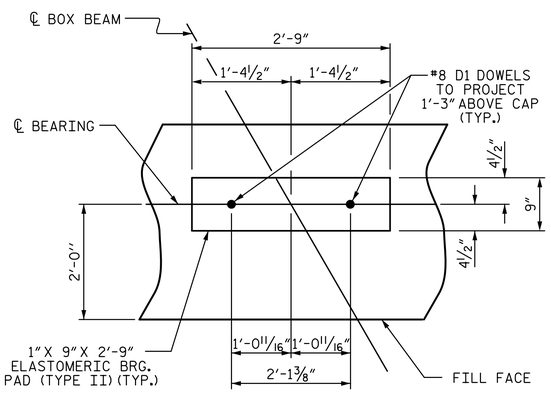

DETAIL "A"

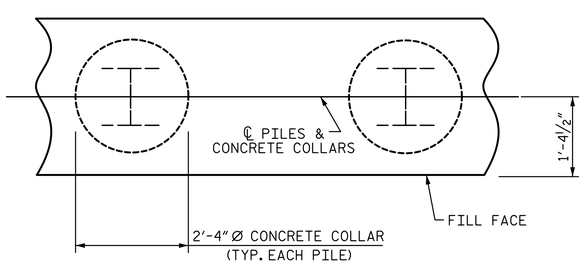

PLAN

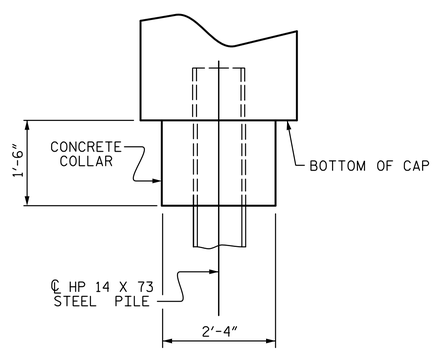

ELEVATION

CORROSION PROTECTION FOR STEEL PILES DETAIL

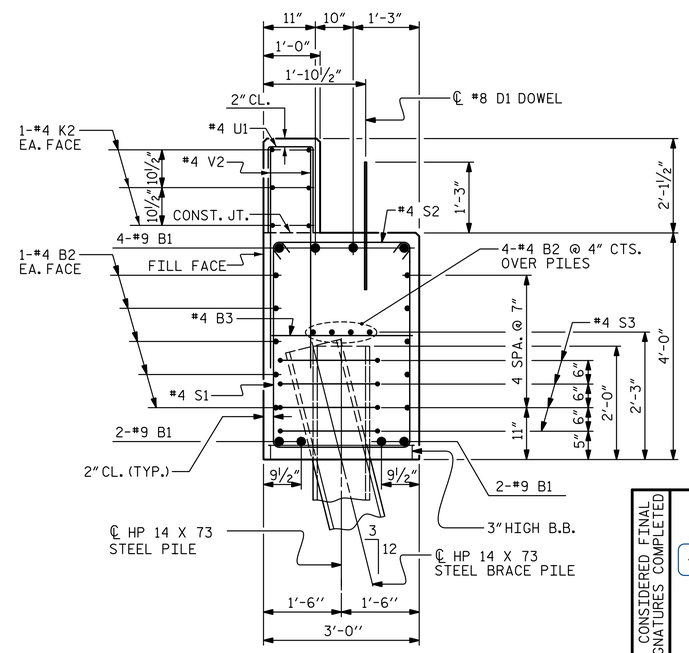

SECTION A-A

PROJECT NO. 17BP.12.R.62

CATAWBA COUNTY

STATION: 13+58.50 -L-

SHEET 3 OF 3

DOCUMENT NOT CONSIDERED FINAL UNLESS ALL SIGNATURES COMPLETED

NORTH CAROLINA PROFESSIONAL SEAL 34955 ENGINEER TIMOTHY J. TOWNSEND 9/17/2021

Mattern & Craig
ENGINEERS·SURVEYORS
12 BROAD STREET
ASHEVILLE, NORTH CAROLINA 28801
(828) 254-2201
FAX (828) 254-4562
NC LIC. NO. C-1154

STATE OF NORTH CAROLINA
DEPARTMENT OF TRANSPORTATION
RALEIGH

SUBSTRUCTURE

END BENT 1 DETAILS

REVISIONS								SHEET NO.
NO.	BY:	DATE:	NO.	BY:	DATE:			S-17
1			3					TOTAL SHEETS
2			4					26

DRAWN BY : DKA DATE : 8-21
CHECKED BY : TJT DATE : 8-21
DESIGN ENGINEER OF RECORD: T. TOWNSEND DATE : 9-21

DATE: 9/9/2021 TIME: 10:39:16 AM
FILE: I:\3790B - Div 12 Bridge 57 (Catawba Co)\Dwg\401.033.17BP.12.R.62_SMU_E1.017_170057.dgn

DocuSign Envelope ID: FE0A09D2-0CB7-40E3-97F8-CFD3D98BBBA1

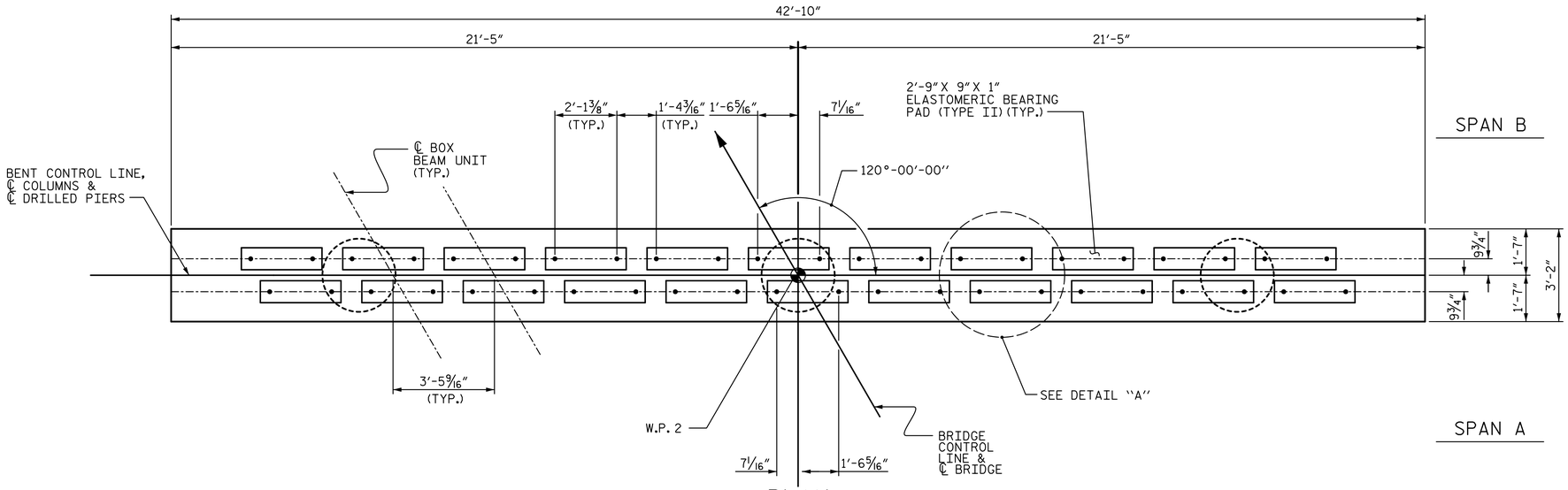

PLAN

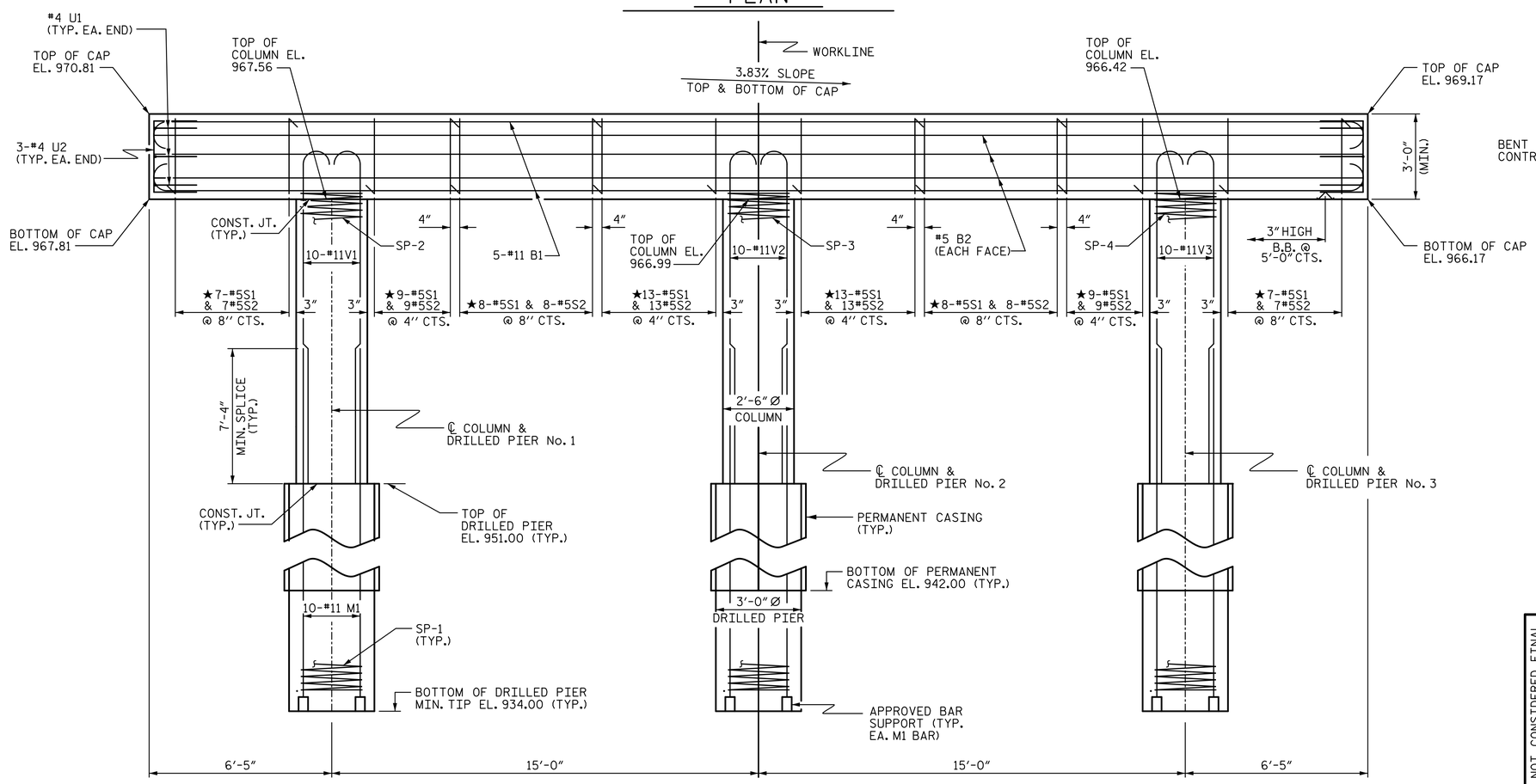

ELEVATION

DIMENSIONS & REINFORCING STEEL ARE TYPICAL FOR EACH COLUMN & DRILLED PIER UNLESS OTHERWISE NOTED.

NOTES

STIRRUPS IN CAP MAY BE SHIFTED AS NECESSARY TO CLEAR DOWELS.

HOOKS ON "V" BARS MAY BE TURNED AS NECESSARY FOR PLACING REINFORCING STEEL.

FOR DRILLED PIERS, SEE SECTION 411 OF THE STANDARD SPECIFICATIONS.

ALL STEEL IN THE DRILLED PIERS IS INCLUDED IN THE PAY ITEMS FOR "REINFORCING STEEL" AND "SPIRAL COLUMN REINFORCING STEEL."

★ INVERT ALTERNATE STIRRUPS.

THE LOCATION OF THE CONSTRUCTION JOINT IN THE DRILLED PIERS IS BASED ON AN APPROXIMATE GROUND LINE ELEVATION. IF THE CONSTRUCTION JOINT IS ABOVE THE ACTUAL GROUND LINE ELEVATION, THE CONTRACTOR SHALL PLACE THE CONSTRUCTION JOINT ONE FOOT BELOW THE GROUND LINE.

DRILLED PIERS SHALL BE TERMINATED ONE FOOT ± ABOVE NORMAL WATER SURFACE ELEVATION FOR SHAFTS LOCATED IN WATER.

THE CONTRACTOR'S ATTENTION IS CALLED TO THE FACT THAT THE LONGITUDINAL REINFORCEMENT FOR DRILLED PIERS IS DETAILED WITH 3 FEET OF EXTRA LENGTH.

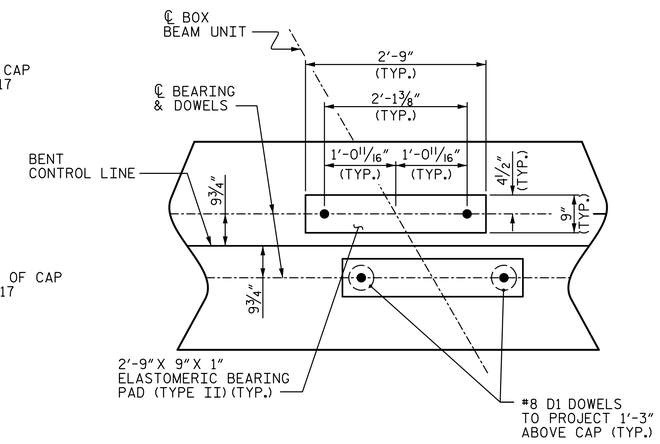

DETAIL "A"

(DIMENSIONS ARE TYPICAL EACH BEARING)

PROJECT NO. 17BP.12.R.62

CATAWBA COUNTY

STATION: 13+58.50 -L-

SHEET 1 OF 2

DOCUMENT NOT CONSIDERED FINAL UNLESS ALL SIGNATURES COMPLETED

NORTH CAROLINA PROFESSIONAL SEAL 34955 ENGINEER TIMOTHY J. TOWNSEND
DocuSigned by: Timothy J. Townsend
9/17/2021

Mattern & Craig
ENGINEERS·SURVEYORS
12 BROAD STREET
ASHEVILLE, NORTH CAROLINA 28801
(828) 254-2201
FAX (828) 254-4562
NC LIC. NO. C-1154

STATE OF NORTH CAROLINA
DEPARTMENT OF TRANSPORTATION
RALEIGH

SUBSTRUCTURE

BENT 1
PLAN AND ELEVATION

REVISIONS							
NO.	BY:	DATE:	NO.	BY:	DATE:	SHEET NO.	S-18
1			3			TOTAL SHEETS	26
2			4				

DRAWN BY : DKA	DATE : 8-21	DESIGN ENGINEER OF RECORD: T. TOWNSEND	DATE : 9-21
CHECKED BY : TJT	DATE : 8-21		

DATE: 9/9/2021 TIME: 10:40:03 AM
FILE: I:\3790B - Div 12 Bridge 57 (Catawba Co)\Dwg\401_035_17BP.12.R.62_SMU_B1_018_170057.dgn

DocuSign Envelope ID: FE0A09D2-0CB7-40E3-97F8-CFD3D98BBBA1

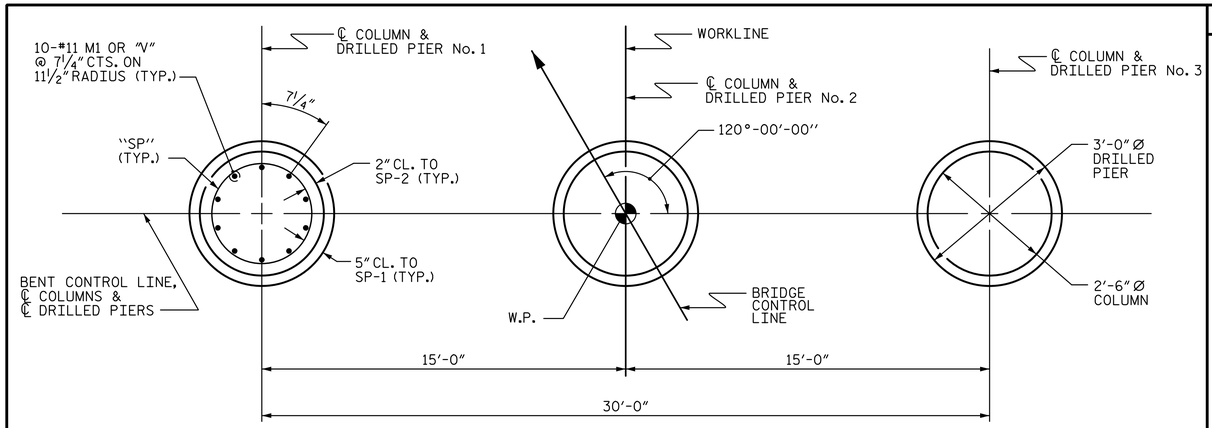

PLAN OF DRILLED PIERS & COLUMNS

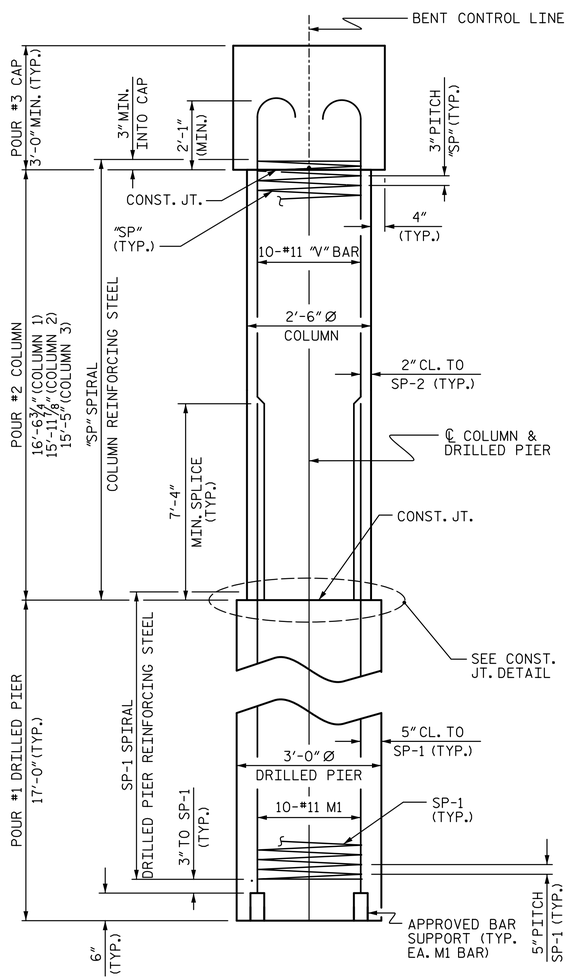

END ELEVATION

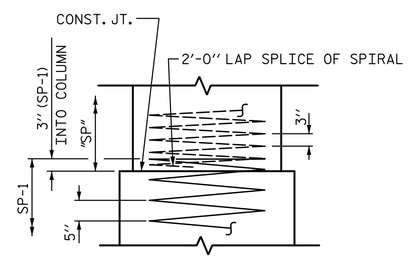

CONSTRUCTION JOINT DETAIL

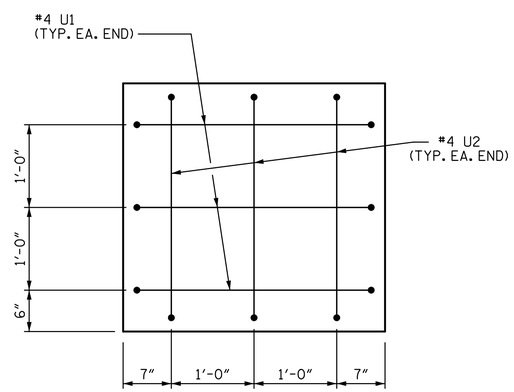

END OF CAP VIEW

(TYPICAL BOTH ENDS)

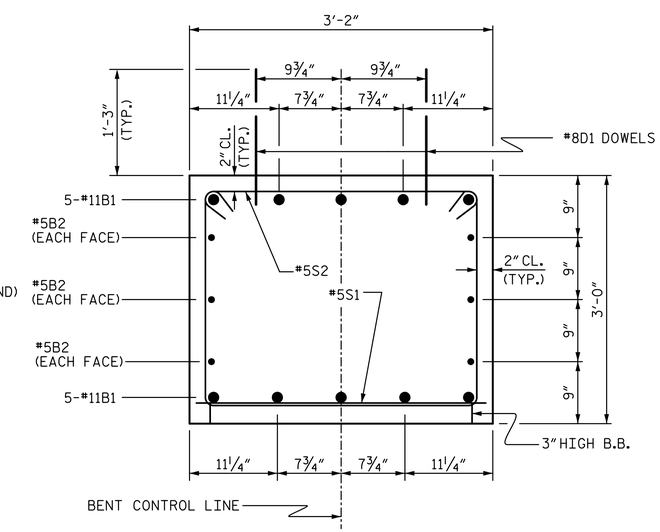

SECTION THRU CAP

BAR TYPES

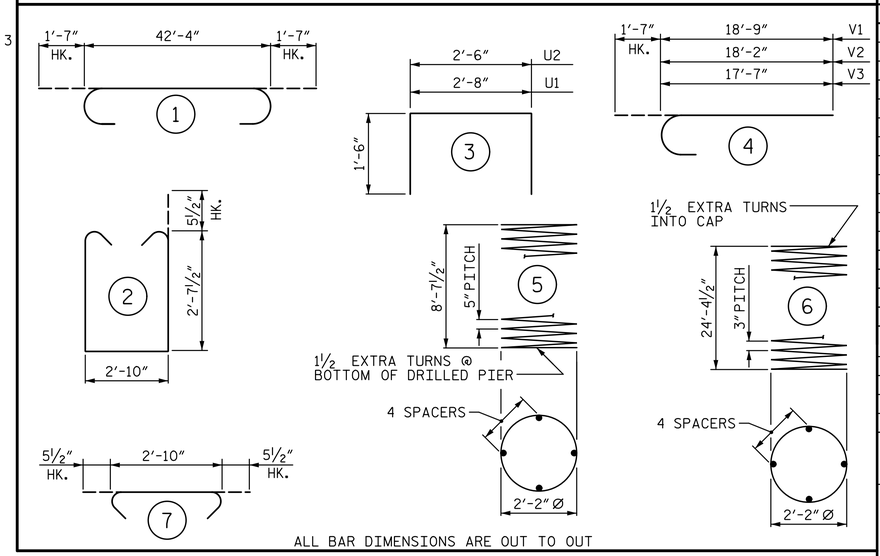

ALL BAR DIMENSIONS ARE OUT TO OUT

BILL OF MATERIAL

BAR	NO.	SIZE	TYPE	LENGTH	WEIGHT
B1	10	#11	1	45'-6"	2417
B2	6	#5	STR	42'-6"	266
D1	44	#8	STR	2'-3"	264
M1	30	#11	STR	26'-10"	4277
S1	74	#5	2	9'-0"	695
S2	74	#5	7	3'-9"	289
U1	6	#4	3	5'-8"	23
U2	6	#4	3	5'-6"	22
V1	10	#11	4	20'-4"	1080
V2	10	#11	4	19'-9"	1049
V3	10	#11	4	19'-2"	1018
REINFORCING STEEL					11401 LBS.
SP-1	3	✳	5	273'-7"	856
SP-2	1	✳✳	6	459'-3"	307
SP-3	1	✳✳	6	444'-0"	297
SP-4	1	✳✳	6	428'-10"	283
SPIRAL COLUMN REINFORCING STEEL					1746 LBS.

✳ THE SP-1 SPIRAL REINFORCING STEEL SHALL BE W31 OR D-31 COLD DRAWN WIRE OR #5 PLAIN OR DEFORMED BAR

✳✳ THE "SP" SPIRAL REINFORCING STEEL SHALL BE W20 OR D-20 COLD DRAWN WIRE OR #4 PLAIN OR DEFORMED BAR

CLASS A CONCRETE BREAKDOWN (FOR ONE BENT)

POUR #2 (COLUMNS)	8.7 C.Y.
POUR #3 (CAP)	15.1 C.Y.
TOTAL CLASS A CONCRETE	23.8 C.Y.

DRILLED PIERS:

DRILLED PIER CONCRETE POUR #1 (DRILLED PIERS)	13.4 C.Y.
3'-0" Ø DRILLED PIER NOT IN SOIL	28.0 LIN. FT.
3'-0" Ø DRILLED PIER IN SOIL	23.0 LIN. FT.
PERMANENT STEEL CASING FOR 3'-0" Ø DRILLED PIER	27.0 LIN. FT.
CSL TUBES	630.0 LIN. FT.
CSL TESTING	1 EA.
SID INSPECTION	1 EA.

PROJECT NO. 17BP.12.R.62

CATAWBA COUNTY

STATION: 13+58.50 -L-

SHEET 2 OF 2

DOCUMENT NOT CONSIDERED FINAL UNLESS ALL SIGNATURES COMPLETED

NORTH CAROLINA PROFESSIONAL SEAL 34955 ENGINEER TIMOTHY J. TOWNSEND 9/17/2021

Mattern & Craig
ENGINEERS·SURVEYORS
12 BROAD STREET
ASHEVILLE, NORTH CAROLINA 28801
(828) 254-2201
FAX (828) 254-4562
NC LIC. NO. C-1154

STATE OF NORTH CAROLINA
DEPARTMENT OF TRANSPORTATION
RALEIGH

SUBSTRUCTURE

BENT 1 DETAILS

REVISIONS								SHEET NO.
NO.	BY:	DATE:	NO.	BY:	DATE:			S-19
1			3					TOTAL SHEETS
2			4					26

DRAWN BY : DKA	DATE : 8-21	DESIGN ENGINEER OF RECORD: T. TOWNSEND	DATE : 9-21
CHECKED BY : TJT	DATE : 8-21		

DATE: 9/9/2021 TIME: 10:40:06 AM
FILE: I:\3790B - Div 12 Bridge 57 (Catawba Co)\Dwg\401_037_17BP.12.R.62_SMU_B1_019_170057.dgn

DocuSign Envelope ID: FE0A09D2-0CB7-40E3-97F8-CFD3D98BBBA1

NOTES

STIRRUPS IN CAP MAY BE SHIFTED AS NECESSARY TO CLEAR DOWELS.

THE CONCRETE IN THE SHADED AREA OF THE WING SHALL BE POURED AFTER THE VERTICAL CONCRETE BARRIER RAIL IS CAST IF SLIP FORMING IS USED.

FOR PILE SPLICE DETAILS, SEE SHEET 3 OF 3.

FOR WING DETAILS, SEE SHEET 2 OF 3.

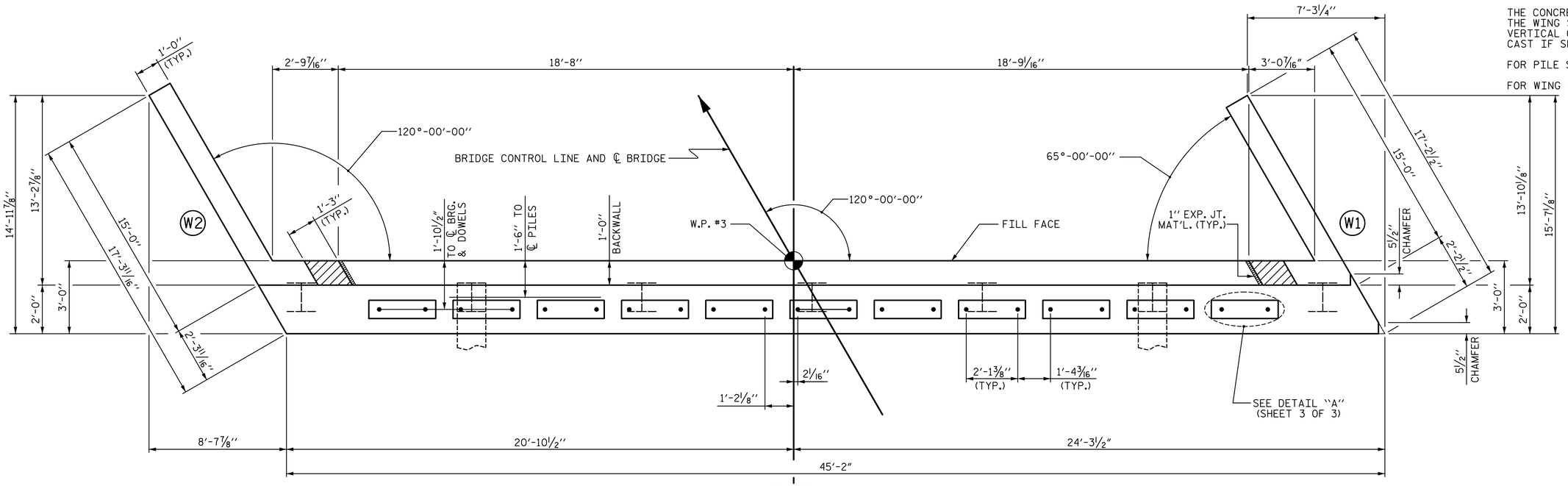

PLAN

TOP OF PILE ELEVATIONS	
1	969.49
2	969.22
3	968.96
4	968.70
5	968.43
6	968.17
7	967.90

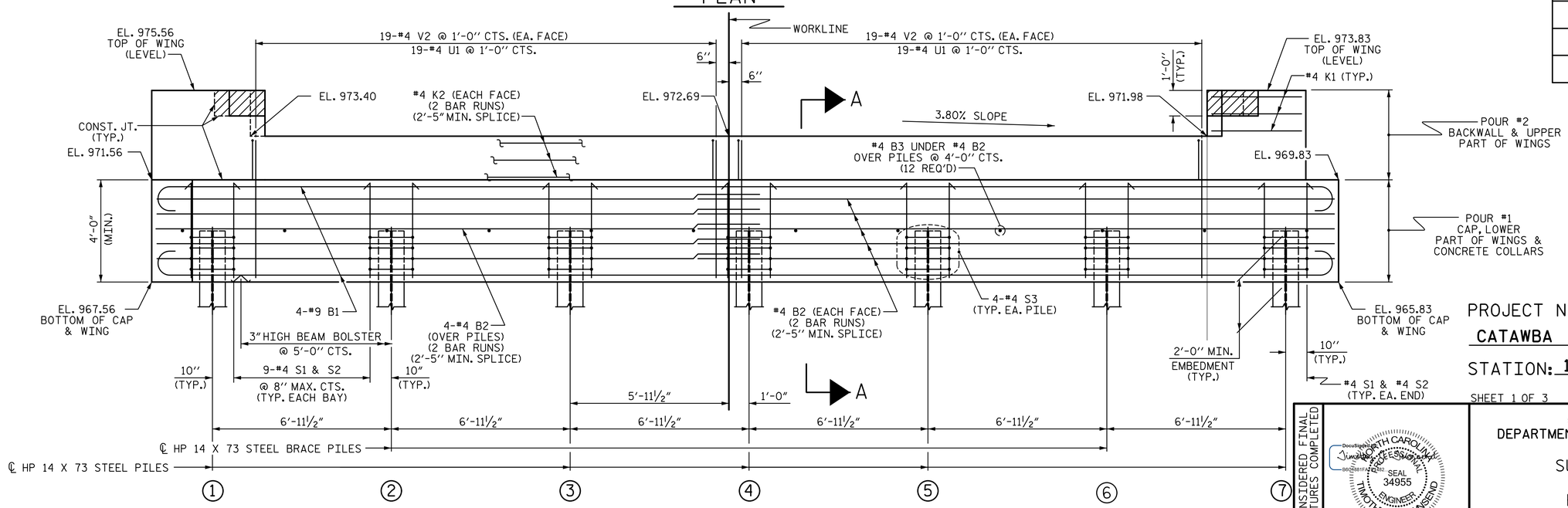

ELEVATION

WINGS NOT SHOWN FOR CLARITY.
FOR SECTION A-A, SEE SHEET 3 OF 3.

PROJECT NO. 17BP.12.R.62

CATAWBA COUNTY

STATION: 13+58.50 -L-

SHEET 1 OF 3

DOCUMENT NOT CONSIDERED FINAL UNLESS ALL SIGNATURES COMPLETED

NORTH CAROLINA PROFESSIONAL SEAL 34955 ENGINEER TIMOTHY J. TOWNSEND
DocuSigned by: Timothy J. Townsend
9/17/2021

Mattern & Craig
ENGINEERS·SURVEYORS
12 BROAD STREET
ASHEVILLE, NORTH CAROLINA 28801
(828) 254-2201
FAX (828) 254-4562
NC LIC. NO. C-1154

STATE OF NORTH CAROLINA
DEPARTMENT OF TRANSPORTATION
RALEIGH

SUBSTRUCTURE

END BENT 2
PLAN AND ELEVATION

REVISIONS							
NO.	BY:	DATE:	NO.	BY:	DATE:		
1			3				
2			4				

SHEET NO. S-20
TOTAL SHEETS 26

DRAWN BY : DKA	DATE : 8-21	DESIGN ENGINEER OF RECORD: T. TOWNSEND	DATE : 9-21
CHECKED BY : TJT	DATE : 8-21		

DATE: 9/9/2021 TIME: 10:40:09 AM
FILE: I:\3790B - Div 12 Bridge 57 (Catawba Co)\Dwg\401.039.17BP.12.R.62_SMU_E2_020_170057.dgn

DocuSign Envelope ID: FE0A09D2-0CB7-40E3-97F8-CFD3D98BBBA1

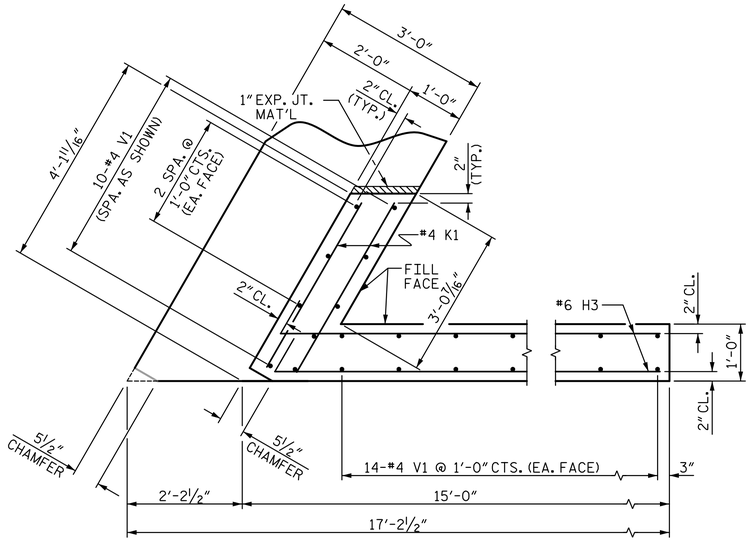

PLAN OF WING (W1)

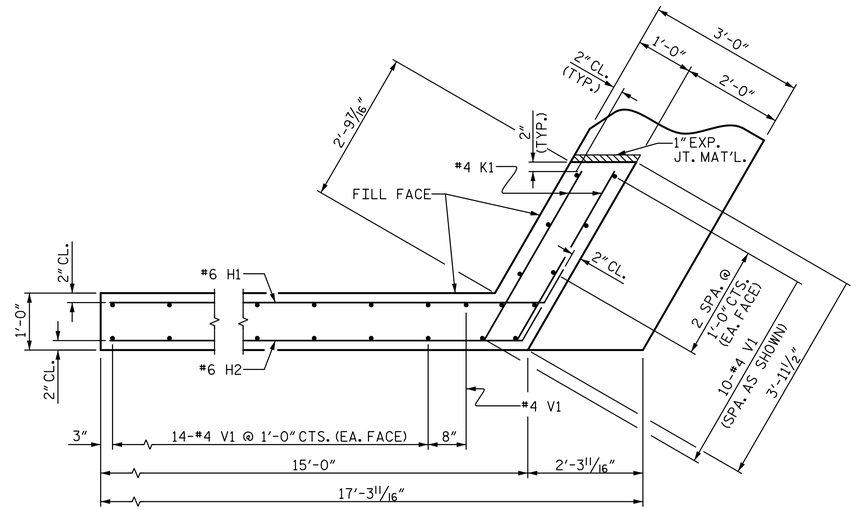

PLAN OF WING (W2)

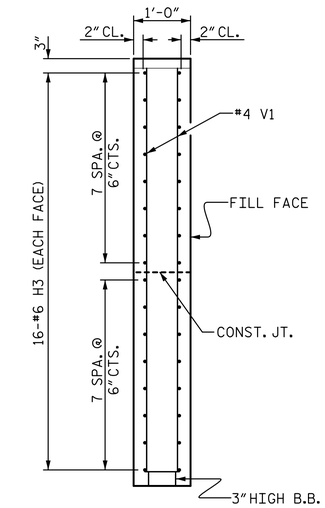

SECTION X-X

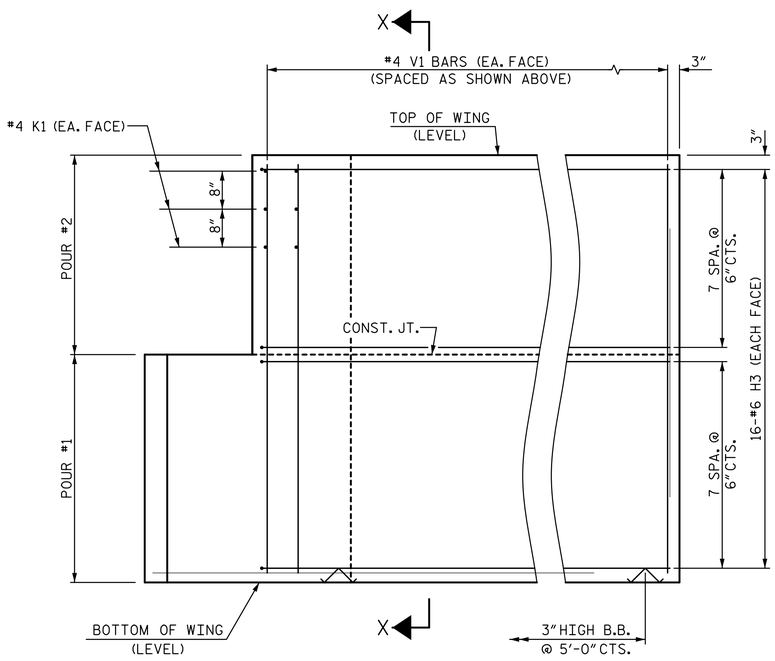

ELEVATION OF WING (W1)

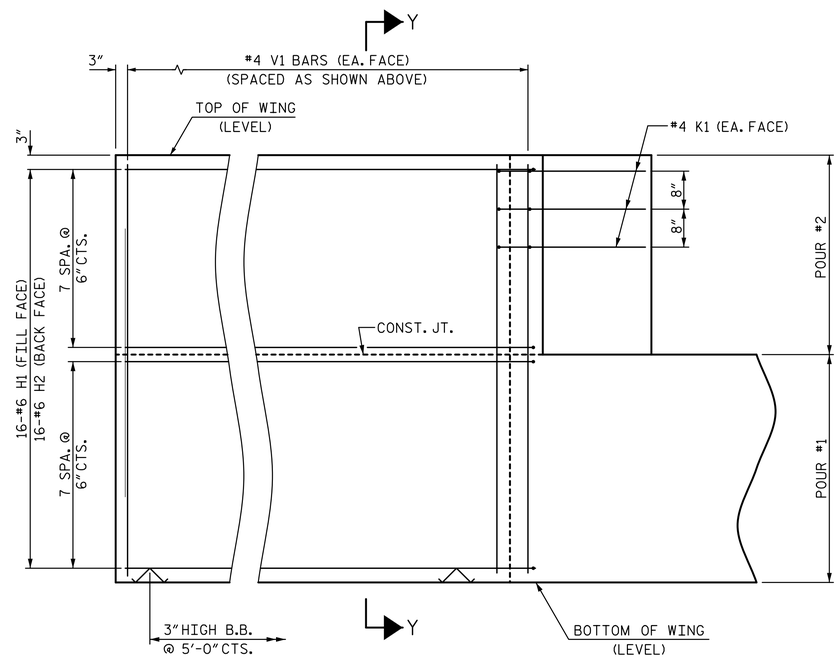

ELEVATION OF WING (W2)

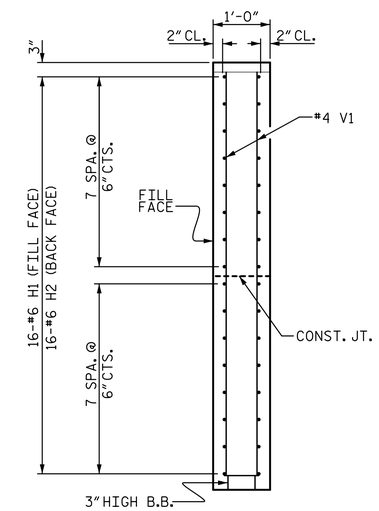

SECTION Y-Y

WING DETAILS

PROJECT NO. 17BP.12.R.62

CATAWBA COUNTY

STATION: 13+58.50 -L-

SHEET 2 OF 3

DOCUMENT NOT CONSIDERED FINAL UNLESS ALL SIGNATURES COMPLETED

DocuSigned by: Timothy J. Townsend
B6D9B1FA2B8D
NORTH CAROLINA PROFESSIONAL SEAL 34955 ENGINEER TIMOTHY J. TOWNSEND
9/17/2021

Mattern & Craig
ENGINEERS·SURVEYORS
12 BROAD STREET
ASHEVILLE, NORTH CAROLINA 28801
(828) 254-2201
FAX (828) 254-4562
NC LIC. NO. C-1154

STATE OF NORTH CAROLINA
DEPARTMENT OF TRANSPORTATION
RALEIGH

SUBSTRUCTURE

END BENT 2
WING DETAILS

REVISIONS						
NO.	BY:	DATE:	NO.	BY:	DATE:	
1			3			
2			4			

SHEET NO. S-21

TOTAL SHEETS 26

DRAWN BY : DKA	DATE : 8-21	DESIGN ENGINEER OF RECORD: T. TOWNSEND	DATE : 9-21
CHECKED BY : TJT	DATE : 8-21		

DATE: 9/9/2021 TIME: 10:40:12 AM
FILE: I:\3790B - Div 12 Bridge 57 (Catawba Co)\Dwg\401.041.17BP.12.R.62_SMU_E2_021.170057.dgn

DocuSign Envelope ID: FE0A09D2-0CB7-40E3-97F8-CFD3D98BBBA1

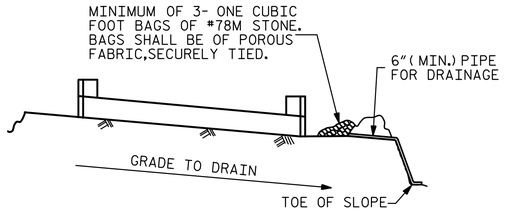

BAGGED STONE AND PIPE SHALL BE PLACED IMMEDIATELY AFTER COMPLETION OF END BENT EXCAVATION. PIPE MAY BE EITHER CONCRETE, CORRUGATED STEEL, CORRUGATED ALUMINUM ALLOY, OR CORRUGATED PLASTIC. PERFORATED PIPE WILL NOT BE ALLOWED.

BAGGED STONE SHALL REMAIN IN PLACE UNTIL THE ENGINEER DIRECTS THAT IT BE REMOVED. THE CONTRACTOR SHALL REMOVE AND DISPOSE OF SILT ACCUMULATIONS AT BAGGED STONE WHEN SO DIRECTED BY THE ENGINEER. BAGS SHALL BE REMOVED AND REPLACED WHENEVER THE ENGINEER DETERMINES THAT THEY HAVE DETERIORATED AND LOST THEIR EFFECTIVENESS.

NO SEPARATE PAYMENT WILL BE MADE FOR THIS WORK AND THE ENTIRE COST OF THIS WORK SHALL BE INCLUDED IN THE UNIT CONTRACT PRICE BID FOR THE SEVERAL PAY ITEMS.

TEMPORARY DRAINAGE AT END BENT

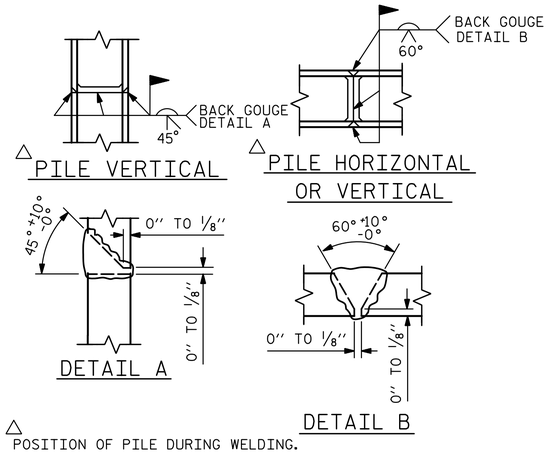

△ POSITION OF PILE DURING WELDING.

PILE SPLICE DETAILS

BAR TYPES

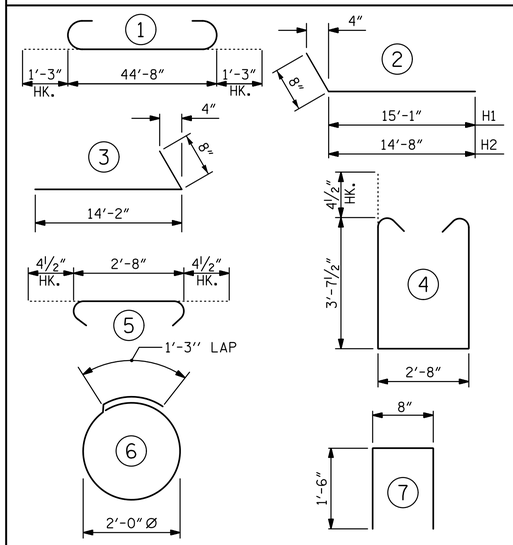

ALL BAR DIMENSIONS ARE OUT TO OUT.

BILL OF MATERIAL

BAR	NO.	SIZE	TYPE	LENGTH	WEIGHT
B1	8	#9	1	47'-2"	1283
B2	28	#4	STR	23'-10"	446
B3	12	#4	STR	2'-8"	21
D1	22	#8	STR	2'-3"	132
H1	16	#6	2	15'-9"	379
H2	16	#6	2	15'-4"	368
H3	32	#6	3	14'-10"	713
K1	12	#4	STR	3'-3"	26
K2	12	#4	STR	23'-6"	188
S1	56	#4	4	10'-8"	399
S2	56	#4	5	3'-5"	128
S3	28	#4	6	7'-7"	142
U1	38	#4	7	3'-8"	93
V1	77	#4	STR	7'-8"	394
V2	76	#4	STR	5'-9"	292

REINFORCING STEEL 5004 LBS.

CLASS A CONCRETE BREAKDOWN

POUR #1 CAP, LOWER PART OF WINGS & COLLARS 25.7 C.Y.

POUR #2 BACKWALL & UPPER PART OF WINGS 8.3 C.Y.

TOTAL CLASS A CONCRETE 34.0 C.Y.

HP 14 X 73 STEEL PILES NO: 7
LIN. FT.= 215

PILE DRIVING EQUIPMENT SETUP FOR
HP 14 X 73 STEEL PILES NO: 7
STEEL PILE POINTS NO: 7

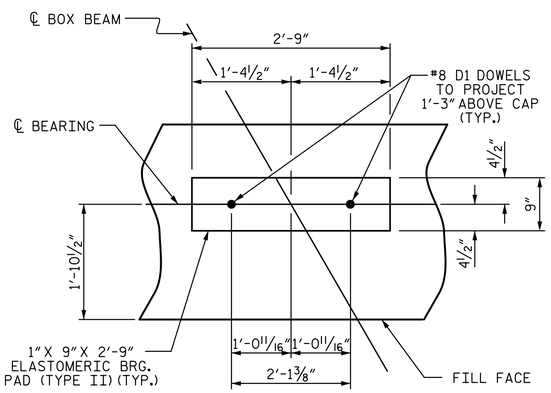

DETAIL "A"

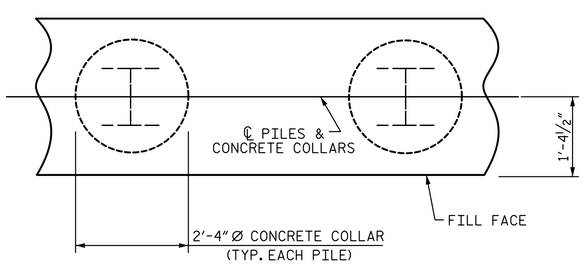

PLAN

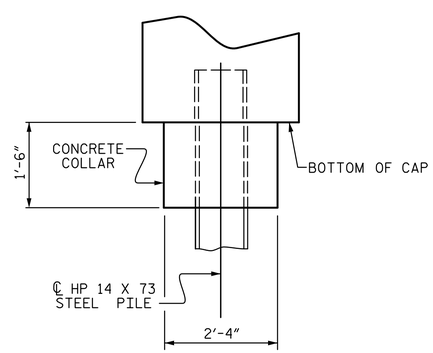

ELEVATION

CORROSION PROTECTION FOR STEEL PILES DETAIL

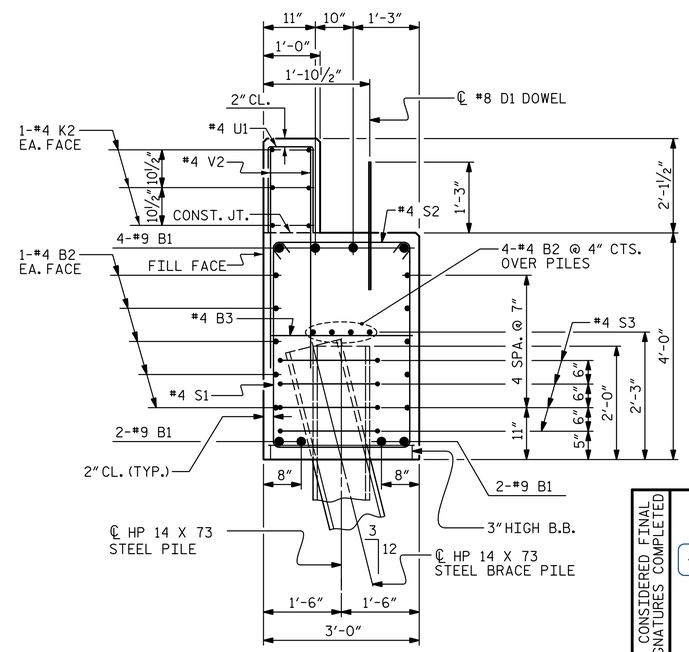

SECTION A-A

PROJECT NO. 17BP.12.R.62
CATAWBA COUNTY
STATION: 13+58.50 -L-

SHEET 3 OF 3

DOCUMENT NOT CONSIDERED FINAL UNLESS ALL SIGNATURES COMPLETED

NORTH CAROLINA PROFESSIONAL SEAL 34955 ENGINEER TIMOTHY J. TOWNSEND
DocuSigned by: Timothy J. Townsend
9/17/2021

Mattern & Craig
ENGINEERS·SURVEYORS
12 BROAD STREET
ASHEVILLE, NORTH CAROLINA 28801
(828) 254-2201
FAX (828) 254-4562
NC LIC. NO. C-1154

STATE OF NORTH CAROLINA
DEPARTMENT OF TRANSPORTATION
RALEIGH

SUBSTRUCTURE

END BENT 2 DETAILS

REVISIONS								SHEET NO.
NO.	BY:	DATE:	NO.	BY:	DATE:			S-22
1			3					TOTAL SHEETS
2			4					26

DRAWN BY : DKA	DATE : 8-21	DESIGN ENGINEER OF RECORD: T. TOWNSEND	DATE : 9-21
CHECKED BY : TJT	DATE : 8-21		

DATE: 9/9/2021 TIME: 10:40:16 AM
FILE: I:\3790B - Div 12 Bridge 57 (Catawba Co)\Dwg\401_043_17BP.12.R.62_SMU_E2_022_170057.dgn

DocuSign Envelope ID: FE0A09D2-0CB7-40E3-97F8-CFD3D98BBBA1

NOTES

FOR BERM WIDTH DIMENSIONS, SEE GENERAL DRAWINGS.

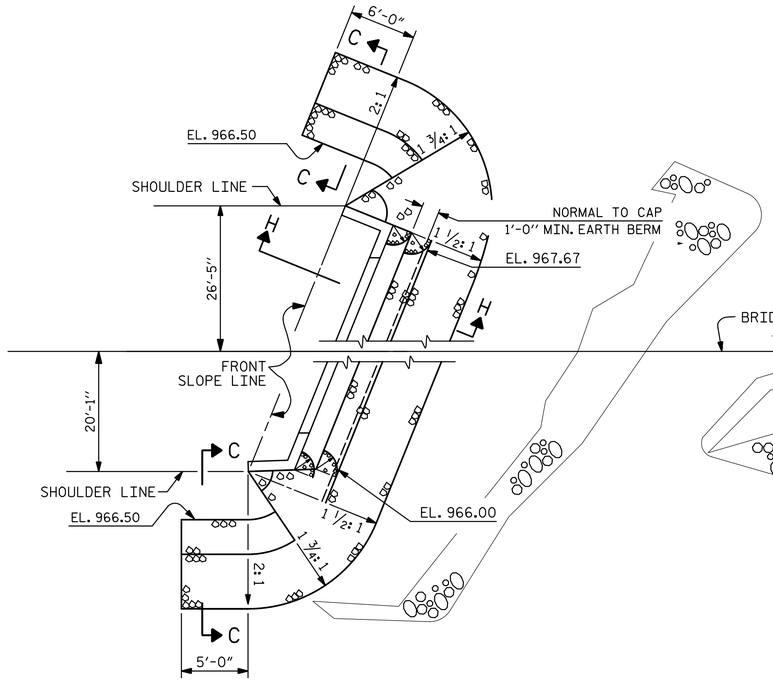

END BENT 1

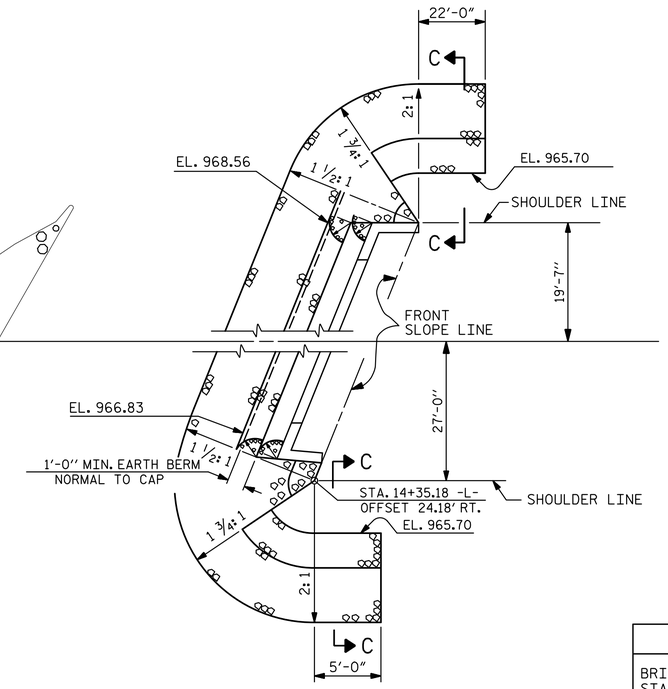

END BENT 1

END BENT 2

BERM RIP RAPPED

ESTIMATED QUANTITIES		
BRIDGE @ STA. 13+58.50	RIP RAP CLASS II (2'-0" THICK)	GEOTEXTILE FOR DRAINAGE
	TONS	SQUARE YARDS
END BENT 1	135	165
END BENT 2	206	255

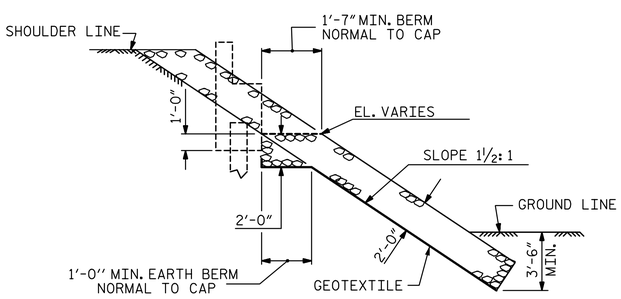

SECTION H-H

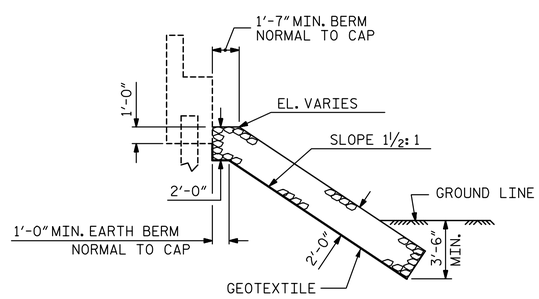

℄ SECTION

BERM RIP RAPPED

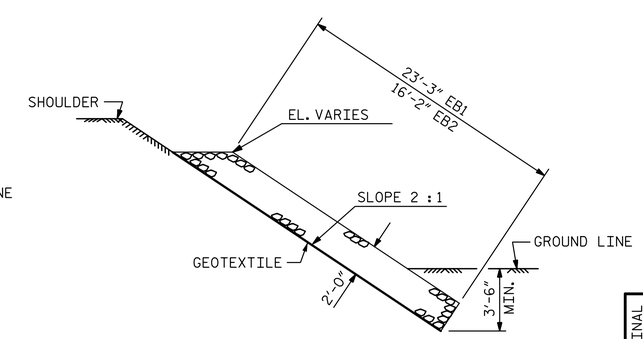

SECTION C-C

PROJECT NO. 17BP.12.R.62

CATAWBA COUNTY

STATION: 13+58.50 -L-

DOCUMENT NOT CONSIDERED FINAL UNLESS ALL SIGNATURES COMPLETED

NORTH CAROLINA PROFESSIONAL SEAL 34955 ENGINEER TIMOTHY J. TOWNSEND
DocuSigned by: Timothy J. Townsend
9/17/2021

Mattern & Craig
ENGINEERS·SURVEYORS
12 BROAD STREET
ASHEVILLE, NORTH CAROLINA 28801
(828) 254-2201
FAX (828) 254-4562
NC LIC. NO. C-1154

STATE OF NORTH CAROLINA
DEPARTMENT OF TRANSPORTATION
RALEIGH

RIP RAP DETAILS

REVISIONS							
NO.	BY:	DATE:	NO.	BY:	DATE:	SHEET NO.	S-23
1			3			TOTAL SHEETS	26
2			4				

DRAWN BY : DKA	DATE : 8-21	DESIGN ENGINEER OF RECORD: T. TOWNSEND	DATE : 9-21
CHECKED BY : TJT	DATE : 8-21		

DATE: 9/9/2021 TIME: 10:40:24 AM
FILE: I:\3790B - Div 12 Bridge 57 (Catawba Co)\Dwg\401.045.17BP.12.R.62.SMU.RR.023.170057.dgn

DocuSign Envelope ID: FE0A09D2-0CB7-40E3-97F8-CFD3D98BBBA1

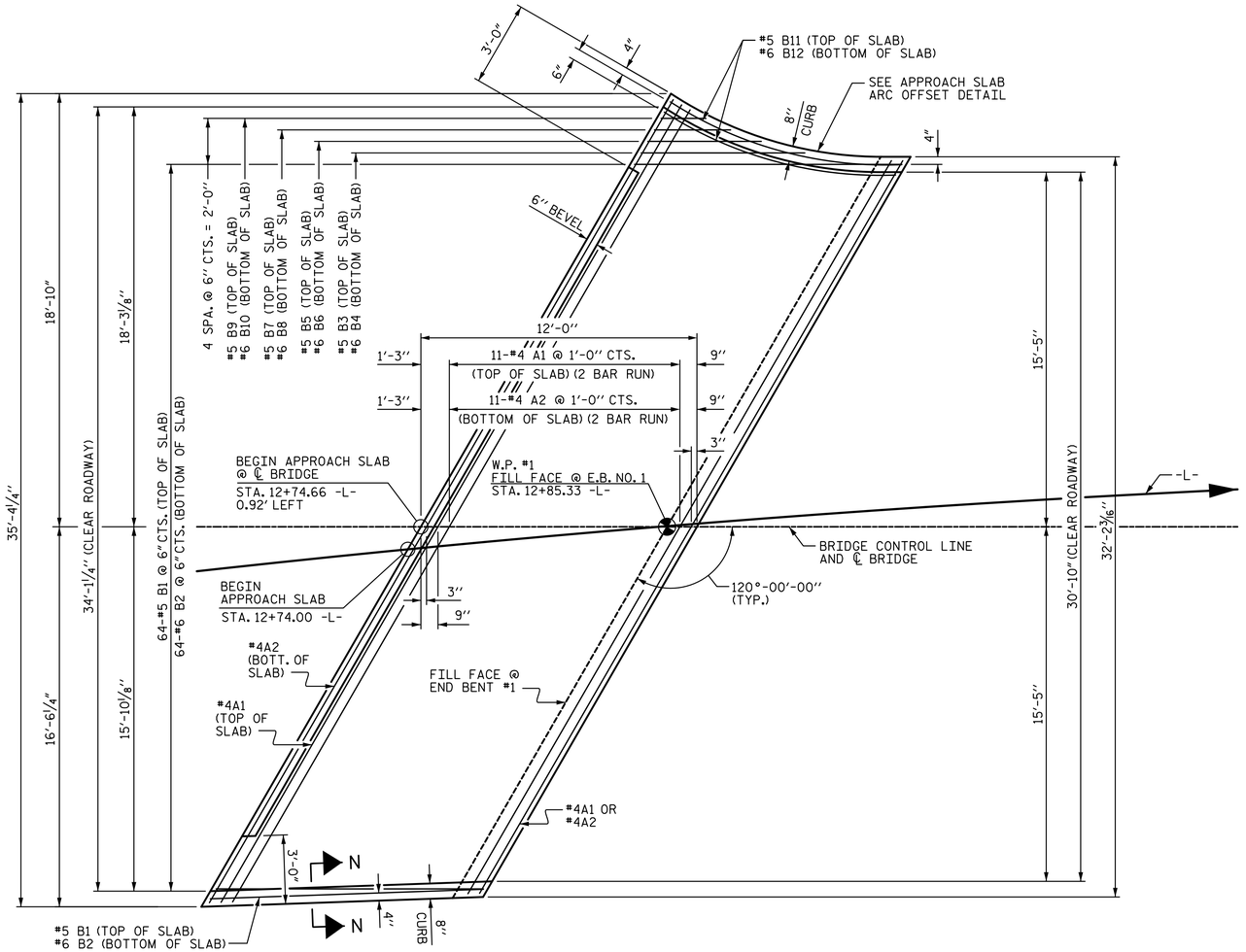

PLAN @ END BENT #1

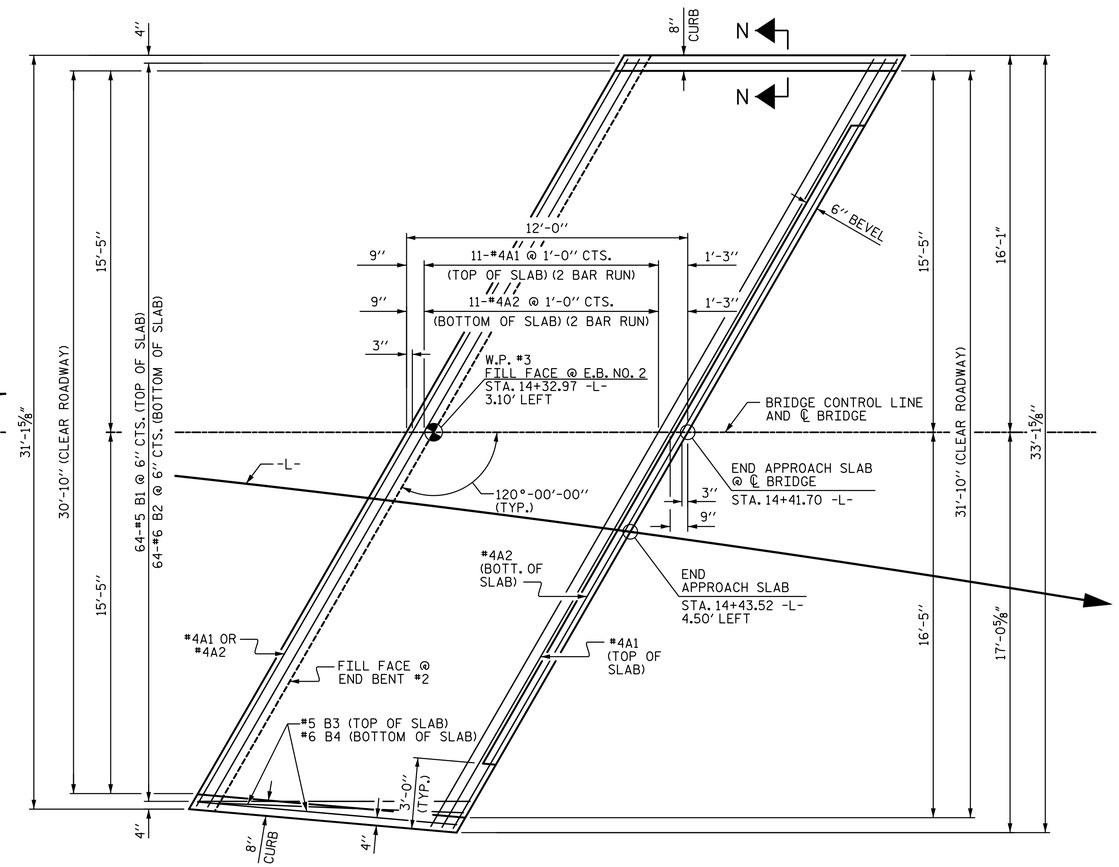

PLAN @ END BENT #2

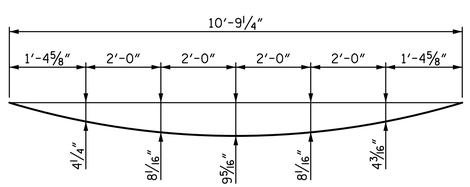

APPROACH SLAB ARC OFFSET DETAIL

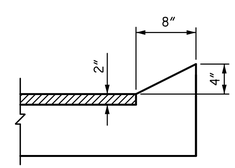

SECTION N-N

CURB DETAILS

PROJECT NO. 17BP.12.R.62

CATAWBA COUNTY

STATION: 13+58.50 -L-

SHEET 1 OF 2

DOCUMENT NOT CONSIDERED FINAL UNLESS ALL SIGNATURES COMPLETED

NORTH CAROLINA PROFESSIONAL SEAL 34955 ENGINEER TIMOTHY J. TOWNSEND
DocuSigned by: Timothy J. Townsend
9/17/2021

Mattern & Craig
ENGINEERS·SURVEYORS
12 BROAD STREET
ASHEVILLE, NORTH CAROLINA 28801
(828) 254-2201
FAX (828) 254-4562
NC LIC. NO. C-1154

STATE OF NORTH CAROLINA
DEPARTMENT OF TRANSPORTATION
RALEIGH

BRIDGE APPROACH SLAB
(SUB-REGIONAL TIER)

REVISIONS								SHEET NO.
NO.	BY:	DATE:	NO.	BY:	DATE:			S-24
1			3					TOTAL SHEETS
2			4					26

DRAWN BY : DKA	DATE : 8-21	DESIGN ENGINEER OF RECORD: T. TOWNSEND	DATE : 9-21
CHECKED BY : TJT	DATE : 8-21		

DATE: 9/9/2021 TIME: 10:40:29 AM
FILE: I:\3790B - Div 12 Bridge 57 (Catawba Co)\Dwg\401_047_17BP.12.R.62_SMU_AS_024_170057.dgn

DocuSign Envelope ID: FE0A09D2-0CB7-40E3-97F8-CFD3D98BBBA1

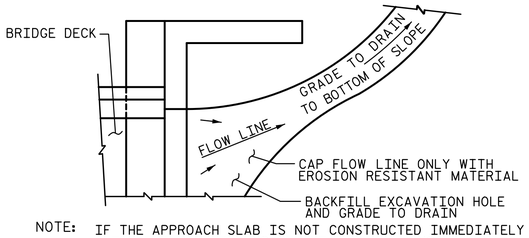

NOTE: IF THE APPROACH SLAB IS NOT CONSTRUCTED IMMEDIATELY AFTER THE BACKFILLING OF THE END BENT EXCAVATION, GRADE TO DRAIN TO THE BOTTOM OF THE SLOPE AND PROVIDE EROSION RESISTANT MATERIAL, SUCH AS FIBERGLASS ROVING OR AS DIRECTED BY THE ENGINEER TO PREVENT SOIL EROSION AND TO PROTECT THE AREA ADJACENT TO THE STRUCTURE. THE CONTRACTOR WILL BE REQUIRED TO REMOVE THESE MATERIALS PRIOR TO CONSTRUCTION OF THE APPROACH SLAB.

TEMPORARY DRAINAGE DETAIL

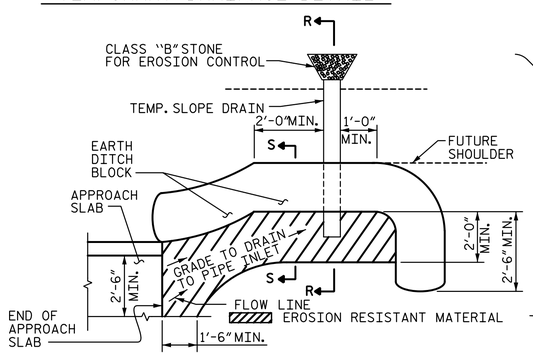

NOTE: IMMEDIATELY AFTER THE CONSTRUCTION OF THE APPROACH SLAB, THE CONTRACTOR SHALL PROVIDE TEMPORARY BERM AND SLOPE DRAIN. CONTRACTOR SHALL GRADE TO PIPE INLET AND PROVIDE EROSION RESISTANT MATERIAL AS SHOWN. THE EROSION RESISTANT MATERIAL SHALL BE EITHER 1) ASPHALT PLANT MIX, TYPE 1 OR TYPE 2, MIN. 2" DEPTH, 2) EROSION CONTROL MAT, OR 3) CONCRETE, AS DIRECTED BY THE ENGINEER. THE SLOPE DRAIN SHALL CONSIST OF A NON-PERFORATED TEMPORARY DRAINAGE PIPE, 12 INCHES IN DIAMETER.

PLAN VIEW

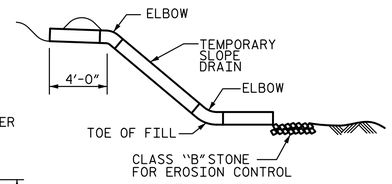

SECTION R-R

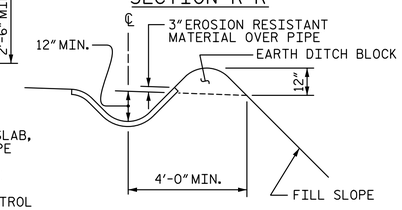

SECTION S-S

TEMPORARY BERM AND SLOPE DRAIN DETAILS

(TO BE USED WHEN SHOULDER BERM GUTTER IS REQUIRED)

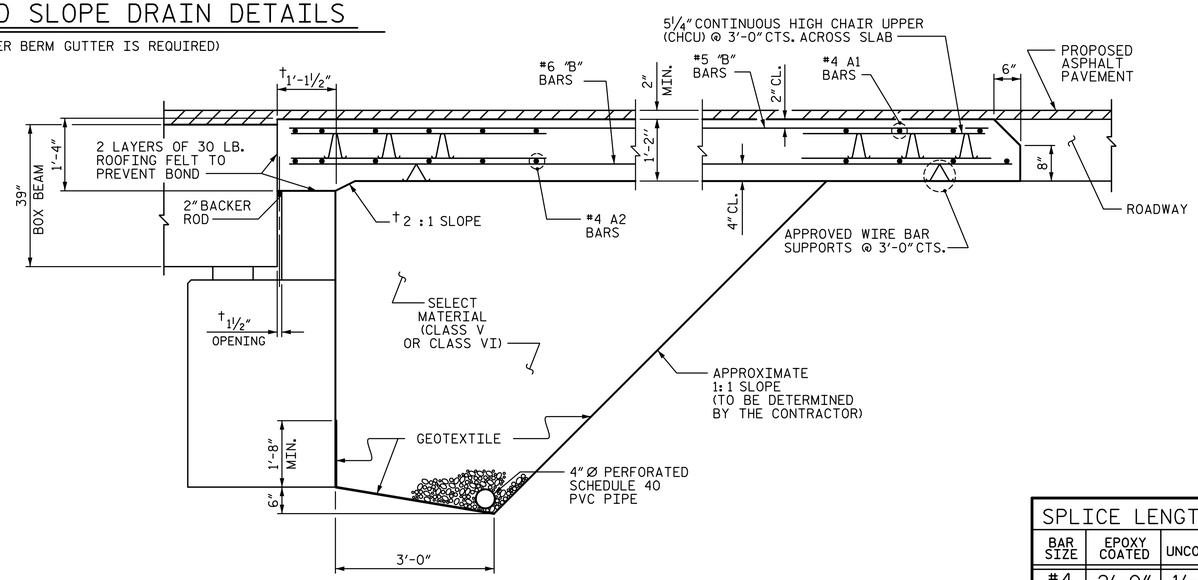

† NORMAL TO END BENT

SECTION THRU SLAB

(TYPE II - MODIFIED APPROACH FILL)

NOTES

FOR BRIDGE APPROACH FILL INCLUDING GEOTEXTILE, 4" Ø DRAINAGE PIPE, AND SELECT MATERIAL BACKFILL, SEE ROADWAY PLANS.

GEOTEXTILE SHALL BE TYPE 1 IN ACCORDANCE WITH THE STANDARD SPECIFICATIONS SECTION 1056.

SELECT MATERIAL BACKFILL (CLASS V OR CLASS VI) SHALL BE IN ACCORDANCE WITH STANDARD SPECIFICATIONS SECTION 1016.

SELECT MATERIAL BACKFILL IS TO BE CONTINUOUS ALONG FILL FACE OF BACKWALL FROM OUTSIDE EDGE TO OUTSIDE EDGE OF APPROACH SLAB.

FOR THE 4" Ø DRAINAGE PIPE OUTLET(S), SEE ROADWAY STANDARD DRAWINGS.

AREA BETWEEN THE WINGWALL AND APPROACH SLAB SHALL BE GRADED TO DRAIN THE WATER AWAY FROM THE FILL FACE OF THE BRIDGE AND SHALL BE PAVED. SEE ROADWAY PLANS.

APPROACH SLAB GROOVING IS NOT REQUIRED.

#5 B11 AND #6 B12 SHALL BE BENT TO MATCH CURVE OF APPROACH SLAB.

BILL OF MATERIAL
APPROACH SLAB AT EB #1

BAR	NO.	SIZE	TYPE	LENGTH	WEIGHT
✳ A1	26	#4	STR	21'-2"	368
A2	26	#4	STR	21'-1"	366
✳ B1	65	#5	STR	11'-1"	751
B2	65	#6	STR	11'-7"	1131
✳ B3	1	#5	STR	7'-6"	8
B4	1	#6	STR	7'-6"	11
✳ B5	1	#5	STR	5'-3"	5
B6	1	#6	STR	5'-3"	8
✳ B7	1	#5	STR	3'-6"	4
B8	1	#6	STR	3'-6"	5
✳ B9	1	#5	STR	2'-1"	2
B10	1	#6	STR	2'-1"	3
✳ B11	2	#5	STR	10'-5"	22
B12	2	#6	STR	10'-5"	31
REINFORCING STEEL				LBS.	1555
✳ EPOXY COATED REINFORCING STEEL				LBS.	1160
CLASS AA CONCRETE				C. Y.	17.6

BILL OF MATERIAL
APPROACH SLAB AT EB #2

BAR	NO.	SIZE	TYPE	LENGTH	WEIGHT
✳ A1	26	#4	STR	20'-0"	347
A2	26	#4	STR	19'-11"	346
✳ B1	64	#5	STR	11'-1"	740
B2	64	#6	STR	11'-7"	1113
✳ B3	2	#5	STR	11'-0"	23
B4	2	#6	STR	11'-0"	33
REINFORCING STEEL				LBS.	1492
✳ EPOXY COATED REINFORCING STEEL				LBS.	1110
CLASS AA CONCRETE				C. Y.	17.3

SPLICE LENGTHS

BAR SIZE	EPOXY COATED	UNCOATED
#4	2'-0"	1'-9"
#5	2'-6"	2'-2"
#6	3'-10"	2'-7"

PROJECT NO. 17BP.12.R.62

CATAWBA COUNTY

STATION: 13+58.50 -L-

SHEET 2 OF 2

DOCUMENT NOT CONSIDERED FINAL UNLESS ALL SIGNATURES COMPLETED

DocuSigned by: Timothy J. Townsend — NORTH CAROLINA PROFESSIONAL SEAL 34955 ENGINEER TIMOTHY J. TOWNSEND — 9/17/2021

Mattern & Craig
ENGINEERS·SURVEYORS
12 BROAD STREET
ASHEVILLE, NORTH CAROLINA 28801
(828) 254-2201
FAX (828) 254-4562
NC LIC. NO. C-1154

STATE OF NORTH CAROLINA
DEPARTMENT OF TRANSPORTATION
RALEIGH

BRIDGE APPROACH SLAB DETAILS (SUB-REGIONAL TIER)

REVISIONS								SHEET NO.
NO.	BY:	DATE:	NO.	BY:	DATE:			S-25
1			3					TOTAL SHEETS
2			4					26

DRAWN BY : DKA DATE : 8-21
CHECKED BY : TJT DATE : 8-21
DESIGN ENGINEER OF RECORD: T. TOWNSEND DATE : 9-21

DATE: 9/9/2021 TIME: 10:40:32 AM
FILE: I:\3790B - Div 12 Bridge 57 (Catawba Co)\Dwg\401_049_17BP.12.R.62_SMU_AS_025_170057.dgn

DocuSign Envelope ID: FE0A09D2-0CB7-40E3-97F8-CFD3D98BBBA1

STANDARD NOTES

DESIGN DATA:

SPECIFICATIONS	A.A.S.H.T.O. (CURRENT)
LIVE LOAD	SEE PLANS
IMPACT ALLOWANCE	SEE A.A.S.H.T.O.
STRESS IN EXTREME FIBER OF STRUCTURAL STEEL - AASHTO M270 GRADE 36	20,000 LBS. PER SQ. IN.
- AASHTO M270 GRADE 50W	27,000 LBS. PER SQ. IN.
- AASHTO M270 GRADE 50	27,000 LBS. PER SQ. IN.
REINFORCING STEEL IN TENSION - GRADE 60	24,000 LBS. PER SQ. IN.
CONCRETE IN COMPRESSION	1,200 LBS. PER SQ. IN.
CONCRETE IN SHEAR	SEE A.A.S.H.T.O.
STRUCTURAL TIMBER - TREATED OR UNTREATED EXTREME FIBER STRESS	1,800 LBS. PER SQ. IN.
COMPRESSION PERPENDICULAR TO GRAIN OF TIMBER	375 LBS. PER SQ. IN.
EQUIVALENT FLUID PRESSURE OF EARTH	30 LBS. PER CU. FT. (MINIMUM)

MATERIAL AND WORKMANSHIP:

EXCEPT AS MAY OTHERWISE BE SPECIFIED ON PLANS OR IN THE SPECIAL PROVISIONS, ALL MATERIAL AND WORKMANSHIP SHALL BE IN ACCORDANCE WITH THE 2018 "STANDARD SPECIFICATIONS FOR ROADS AND STRUCTURES" OF THE N. C. DEPARTMENT OF TRANSPORTATION.

STEEL SHEET PILING FOR PERMANENT OR TEMPORARY APPLICATIONS SHALL BE HOT ROLLED.

CONCRETE:

UNLESS OTHERWISE REQUIRED ON PLANS, CLASS A CONCRETE SHALL BE USED FOR ALL PORTIONS OF ALL STRUCTURES WITH THE EXCEPTION THAT: CLASS AA CONCRETE SHALL BE USED IN BRIDGE SUPERSTRUCTURES, ABUTMENT BACKWALLS, AND APPROACH SLABS; AND CLASS B CONCRETE SHALL BE USED FOR SLOPE PROTECTION AND RIP RAP.

CONCRETE CHAMFERS:

UNLESS OTHERWISE NOTED ON THE PLANS, ALL EXPOSED CORNERS ON STRUCTURES SHALL BE CHAMFERED ¾" WITH THE FOLLOWING EXCEPTIONS: TOP CORNERS OF CURBS MAY BE ROUNDED TO 1½" RADIUS WHICH IS BUILT INTO CURB FORMS; CORNERS OF TRANSVERSE FLOOR EXPANSION JOINTS SHALL BE ROUNDED WITH A ¼" FINISHING TOOL UNLESS OTHERWISE REQUIRED ON PLANS; AND CORNERS OF EXPANSION JOINTS IN THE ROADWAY FACES AND TOPS OF CURBS AND SIDEWALKS SHALL BE ROUNDED TO A ¼" RADIUS WITH A FINISHING STONE OR TOOL UNLESS OTHERWISE REQUIRED ON PLANS.

DOWELS:

DOWELS WHEN INDICATED ON PLANS AS FOR CULVERT EXTENSIONS, SHALL BE EMBEDDED AT LEAST 12" INTO THE OLD CONCRETE AND GROUTED INTO PLACE WITH 1:2 CEMENT MORTAR.

ALLOWANCE FOR DEAD LOAD DEFLECTION, SETTLEMENT, ETC. IN CASTING SUPERSTRUCTURES:

BRIDGES SHALL BE BUILT ON THE GRADE OR VERTICAL CURVE SHOWN ON PLANS. SLABS, CURBS AND PARAPETS SHALL CONFORM TO THE GRADE OR CURVE.

ALL DIMENSIONS WHICH ARE GIVEN IN SECTION AND ARE AFFECTED BY DEAD LOAD DEFLECTIONS ARE DIMENSIONS AT CENTER LINE OF BEARING UNLESS OTHERWISE NOTED ON PLANS. IN SETTING FORMS FOR STEEL BEAM BRIDGES AND PRESTRESSED CONCRETE GIRDER BRIDGES, ADJUSTMENTS SHALL BE MADE DUE TO THE DEAD LOAD DEFLECTIONS FOR THE ELEVATIONS SHOWN. WHERE BLOCKS ARE SHOWN OVER BEAMS FOR BUILDING UP TO THE SLAB, THE VERTICAL DIMENSIONS OF THE BLOCKS SHALL BE ADJUSTED BETWEEN BEARINGS TO COMPENSATE FOR DEAD LOAD DEFLECTIONS, VERTICAL CURVE ORDINATE, AND ACTUAL BEAM CAMBER. WHERE BOTTOM OF SLAB IS IN LINE WITH BOTTOM OF TOP FLANGES, DEPTH OF SLAB BETWEEN BEARINGS SHALL BE ADJUSTED TO COMPENSATE FOR DEAD LOAD DEFLECTION, VERTICAL CURVE ORDINATE, AND ACTUAL BEAM CAMBER.

IN SETTING FALSEWORK AND FORMS FOR REINFORCED CONCRETE SPANS, AN ALLOWANCE SHALL BE MADE FOR DEAD LOAD DEFLECTIONS, SETTLEMENT OF FALSEWORK, AND PERMANENT CAMBER WHICH SHALL BE PROVIDED FOR IN ADDITION TO THE ELEVATIONS SHOWN. AFTER REMOVAL OF THE FALSEWORK, THE FINISHED STRUCTURES SHALL CONFORM TO THE PROFILE AND ELEVATIONS SHOWN ON THE PLANS AND CONSTRUCTION ELEVATIONS FURNISHED BY THE ENGINEER.

DETAILED DRAWINGS FOR FALSEWORK OR FORMS FOR BRIDGE SUPERSTRUCTURE AND ANY STRUCTURE OR PARTS OF A STRUCTURE AS NOTED ON THE PLANS SHALL BE SUBMITTED TO THE ENGINEER FOR APPROVAL BEFORE CONSTRUCTION OF THE FALSEWORK OR FORMS IS STARTED.

REINFORCING STEEL:

ALL REINFORCING STEEL SHALL BE DEFORMED. DIMENSIONS RELATIVE TO PLACEMENT OF REINFORCING ARE TO CENTERS OF BARS UNLESS OTHERWISE INDICATED IN THE PLANS. DIMENSIONS ON BAR DETAILS ARE TO CENTERS OF BARS OR ARE OUT TO OUT AS INDICATED ON PLANS.

WIRE BAR SUPPORTS SHALL BE PROVIDED FOR REINFORCING STEEL WHERE INDICATED ON THE PLANS. WHEN BAR SUPPORT PIECES ARE PLACED IN CONTINUOUS LINES, THEY SHALL BE SO PLACED THAT THE ENDS OF THE SUPPORTING WIRES SHALL BE LAPPED TO LOCK LEGS ON ADJOINING PIECES.

STRUCTURAL STEEL:

AT THE CONTRACTOR'S OPTION, HE MAY SUBSTITUTE ⅞" Ø SHEAR STUDS FOR THE ¾" Ø STUDS SPECIFIED ON THE PLANS. THIS SUBSTITUTION SHALL BE MADE AT THE RATE OF 3 - ⅞" Ø STUDS FOR 4 - ¾" Ø STUDS, AND STUD SPACING CHANGES SHALL BE MADE AS NECESSARY TO PROVIDE THE SAME EQUIVALENT NUMBER OF ⅞" Ø STUDS ALONG THE BEAM AS SHOWN FOR ¾" Ø STUDS BASED ON THE RATIO OF 3 - ⅞" Ø STUDS FOR 4 - ¾" Ø STUDS. STUDS OF THE LENGTH SPECIFIED ON THE PLANS MUST BE PROVIDED. THE MAXIMUM SPACING SHALL BE 2'-0".

EXCEPT AT THE INTERIOR SUPPORTS OF CONTINUOUS BEAMS WHERE THE COVER PLATE IS IN CONTACT WITH BEARING PLATE, THE CONTRACTOR MAY, AT HIS OPTION, SUBSTITUTE FOR THE COVER PLATES DESIGNATED ON THE PLANS COVER PLATES OF THE EQUIVALENT AREA PROVIDED THESE PLATES ARE AT LEAST 5/16" IN THICKNESS AND DO NOT EXCEED A WIDTH EQUAL TO THE FLANGE WIDTH LESS 2" OR A THICKNESS EQUAL TO 2 TIMES THE FLANGE THICKNESS. THE SIZE OF FILLET WELDS SHALL CONFORM TO THE REQUIREMENTS OF THE CURRENT ANSI/AASHTO/AWS "BRIDGE WELDING CODE". ELECTROSLAG WELDING WILL NOT BE PERMITTED.

WITH THE SOLE EXCEPTION OF EDGES AT SURFACES WHICH BEAR ON OTHER SURFACES, ALL SHARP EDGES AND ENDS OF SHAPES AND PLATES SHALL BE SLIGHTLY ROUNDED BY SUITABLE MEANS TO A RADIUS OF APPROXIMATELY 1/16 INCH OR EQUIVALENT FLAT SURFACE AT A SUITABLE ANGLE PRIOR TO PAINTING, GALVANIZING, OR METALLIZING.

HANDRAILS AND POSTS:

METAL STANDARDS AND FACES OF THE CONCRETE END POSTS FOR THE METAL RAIL SHALL BE SET NORMAL TO THE GRADE OF THE CURB, UNLESS OTHERWISE SHOWN ON PLANS. THE METAL RAIL AND TOPS OF CONCRETE POSTS USED WITH THE ALUMINUM RAIL SHALL BE BUILT PARALLEL TO THE GRADE OF THE CURB.

METAL HANDRAILS SHALL BE IN ACCORDANCE WITH THE PLANS. RAILS SHALL BE AS MANUFACTURED FOR BRIDGE RAILING. CASTINGS SHALL BE OF A UNIFORM APPEARANCE. FINS AND OTHER DEFORMATIONS RESULTING FROM CASTING OR OTHERWISE SHALL BE REMOVED IN A MANNER SO THAT A UNIFORM COLORING OF THE COMPLETED CASTING SHALL BE OBTAINED. CASTINGS WITH DISCOLORATIONS OR OF NON-UNIFORM COLORING WILL NOT BE ACCEPTED. CERTIFIED MILL REPORTS ARE REQUIRED FOR METAL RAILS AND POSTS.

SPECIAL NOTES:

GENERALLY, IN CASE OF DISCREPANCY, THIS STANDARD SHEET OF NOTES SHALL GOVERN OVER THE SPECIFICATIONS, BUT THE REMAINDER OF THE PLANS SHALL GOVERN OVER NOTES HEREON, AND SPECIAL PROVISIONS SHALL GOVERN OVER ALL. SEE SPECIFICATIONS ARTICLE 105-4.

PROJECT NO. 17BP.12.R.62

CATAWBA COUNTY

STATION: 13+58.50 -L-

STATE OF NORTH CAROLINA
DEPARTMENT OF TRANSPORTATION
RALEIGH

STANDARD NOTES

Mattern & Craig
•SURVEYORS
12 BROAD STREET
ASHEVILLE, NORTH CAROLINA 28801
(828) 254-2201
FAX (828) 254-4562
NC LIC. NO. C-1154

REVISIONS						SHEET NO.
NO.	BY:	DATE:	NO.	BY:	DATE:	S-26
1			3			TOTAL SHEETS
2			4			26

DATE: 9/9/2021 TIME: 10:40:36 AM
FILE: I:\3790B - Div 12 Bridge 57 (Catawba Co)\Dwg\401.051.17BP.12.R.62_SMU_SN_026_170057.dgn